Nebraska Supreme Court Online Library
www.nebraska.gov/apps-courts-epub/
09/16/2026 06:30 AM CDT

IN RE APPLICATION OF MATTHEW LEO MCKEONE, SR. WATSON BROS. TRANSPORTATION CO., INC., ET AL., APPELLANTS, V. RED BALL TRANSFER COMPANY ET AL., APPELLEES.

67 N. W. 2d 475

Filed December 17, 1954. No. 33480.

1. **Courts: Public Service Commissions.** Courts should review or interfere with administrative and legislative action of the Nebraska State Railway Commission only so far as it is necessary to keep it within its jurisdiction and protect legal and constitutional rights.
2. **Judgments: Public Service Commissions.** The rules relating to nunc pro tunc orders are generally applicable to administrative and quasi-judicial commissions.
3. **Judgments.** If a judgment in fact was rendered, if an order in fact was made, and such judgment or order not recorded, then the court, at any time afterwards, in a proper proceeding and upon a proper showing, is invested with the power to render nunc pro tunc such judgment or make such order.
4. ———. The proper function of a nunc pro tunc order is not for the purpose of correcting some affirmative action of the court which ought to have been taken, but its true purpose is to correct the record which has been made, so that it will truly record the action really had, but which through some inadvertence or mistake has not been truly recorded. In other words, it is an order to make the record speak the truth.
5. ———. A nunc pro tunc judgment must conform to and be no broader in its terms than the one originally rendered, meaning the one originally determined and made but not entered.
6. ———. The order nunc pro tunc may be supported by the judge's notes, court files, or other entries of record. It may also be based upon other evidence, oral or written, which is sufficient to satisfy the court that the order is required to make the record reflect the truth.
7. **Public Service Commissions: Appeal and Error.** On appeal to the Supreme Court from an order of the Nebraska State Railway Commission, while acting within its jurisdiction, the question for determination is the sufficiency of the evidence to prove that the order is not unreasonable or arbitrary.
8. **Equity.** Laches does not grow out of the mere passage of time.
9. **Equity: Pleading.** Where the petition of a plaintiff who has slumbered long upon his rights shows apparent laches on its face, the suitor must generally account for and excuse his delay

by proper allegations in his pleading, and must support such allegations by proof.

APPEAL from the Nebraska State Railway Commission. *Affirmed.*

Jack W. Marer, Samuel V. Cooper, and *Kaplan & Zacharia,* for appellants.

Viren, Emmert & Hilmes, for appellees.

Heard before SIMMONS, C. J., CARTER, MESSMORE, YEAGER, CHAPPELL, WENKE, and BOSLAUGH, JJ.

SIMMONS, C. J.

This proceeding challenges the validity of a nunc pro tunc order of the Nebraska State Railway Commission. The commission sustained the validity of the order. The petitioners appeal. We affirm the order of the commission.

Petitioners are Watson Bros. Transportation Co., Inc. and Union Transfer Company. Both petitioners are corporations. For convenience, they will be hereinafter referred to as the plaintiffs. The holder of the operating authority involved is the Red Ball Transfer Co., originally in single ownership and now a copartnership. For convenience, it will hereinafter be referred to as the defendant. The Nebraska State Railway Commission will be hereinafter referred to as the commission.

On November 24, 1937, the defendant was issued a certificate of public convenience and necessity under the so-called grandfather clause of the Motor Carrier Act. Laws 1937, c. 142, § 7, p. 531. That certificate authorized irregular route operations "From Omaha, Lincoln, Hastings and Grand Island, Nebraska to and from various points in the State of Nebraska at large."

The record shows that the defendant at the time of the issuance of the certificate was owned and operated by Matthew Leo McKeone, Sr. On June 19, 1945, he made application for a transfer of his certificate to a partnership consisting of himself and his sons. On June

22, 1945, the commission granted the application, cancelled and revoked the original certificate, and granted a new certificate of public convenience and necessity. It did not change the authorized irregular route operations.

On June 12, 1952, the defendant filed its petition praying for "a nunc pro tunc order clarifying and correcting the irregular route operating authority presently issued to applicant * * * to read as follows: Irregular Route Operations: To and from points and places in the State of Nebraska at large."

On June 14, 1952, the commission, without giving notice or public hearing, entered its order amending the certificate of convenience and necessity so as to authorize irregular route operations "Between points and places within the State of Nebraska at large."

Plaintiffs then on December 18, 1952, filed their petition praying that the nunc pro tunc order of June 14, 1952, be cancelled and revoked or, in the alternative, set for a public hearing. They alleged that they were holding intrastate authorities granted by the commission and were continuously engaged in transporting commodities in Nebraska. These allegations the defendant admitted by answer.

Plaintiffs alleged that the issuance of the nunc pro tunc order provided for the enlargement, extension, and expansion of the authority of defendant; that it was acted upon without notice and entered without a hearing; and that they first became aware of the order on December 11, 1952. Defendant by answer admitted the application for and issuance of the nunc pro tunc order and denied otherwise.

Plaintiffs then made a series of allegations which may be summarized and reduced to the contentions that the commission was without jurisdiction to enter the nunc pro tunc order; that the matter was handled ex parte; that there was no notice and no hearing on the application; and that defendant was guilty of laches. De-

fendant joined issue by a general denial in effect of these allegations.

The commission heard the matter on February 23, 1953, at which evidence, mostly documentary, was introduced.

The commission on April 14, 1953, found that the issues raised by the petition here involved were made moot by a commission order of December 2, 1952, which was served upon the plaintiffs and others on January 30, 1953. This order was entered in a proceeding whereby the acquisition by the defendant of operating rights and authority of Glen and Irene Swedell were approved, and a consolidated certificate of convenience and necessity was issued to defendant which authorized irregular route operations "between points and places within the State of Nebraska at large." The order shows that these plaintiffs appeared as interveners in opposition in that matter.

The commission found that the petition here involved should be dismissed, and so ordered.

Plaintiffs then moved for reversal, modification, vacation, or rehearing of that order, asserting among other things that the commission had not passed upon the issues presented by the pleadings and the evidence.

Thereafter, on July 28, 1953, the commission heard the matter. It found that the order entered nunc pro tunc was in all respects valid and proper and all notices required by law were given; that the order of December 2, 1952, was decisive of the issues herein; and denied the motion.

The plaintiffs attacking the order here contend that the order was not a nunc pro tunc order. They contend that it was one enlarging and broadening the authority originally granted; that it was in effect the granting of a new and different authority and as such required defendant to meet the conditions provided by statute; and that it was one which required the giving of notice and a public hearing as provided by statute.

The question, then, is: Was this a nunc pro tunc order or was it one granting a new certificate of authority?

It is the rule that: "Courts should review or interfere with administrative and legislative action of the Nebraska State Railway Commission only so far as it is necessary to keep it within its jurisdiction and protect legal and constitutional rights." In re Application of Meyer, 150 Neb. 455, 34 N. W. 2d 904.

The rules relating to nunc pro tunc orders are generally applicable to administrative and quasi-judicial commissions. Frankfort Ky. Nat. Gas Co. v. City of Frankfort, 276 Ky. 199, 123 S. W. 2d 270. We have so applied them.

In North Loup River P. P. & I. Dist. v. Loup River P. P. Dist., 149 Neb. 823, 32 N. W. 2d 869, we stated the rules as follows: " 'If a judgment in fact was rendered, if an order in fact was made, and such judgment or order not recorded, then the court, at any time afterwards, in a proper proceeding and upon a proper showing, is invested with the power to render nunc pro tunc such judgment or make such order.' "

" 'It must be borne in mind that the proper function of a nunc pro tunc order is not for the purpose of correcting some affirmative action of the court which ought to have been taken, but its true purpose is to correct the record which has been made, so that it will truly record the action really had, but which through some inadvertence or mistake has not been truly recorded. In other words, it is an order to make the record speak the truth.' "

"We have also held that such a judgment must conform to and be no broader in its terms than the judgment actually rendered."

The last rule just quoted is taken from the body of the opinion. As stated in the syllabus points, it is: "Such a judgment must conform to and be no broader in its terms than the judgment actually entered."

The use of the phrases "actually rendered" in the opinion and "actually entered" in the syllabus was an unfortunate choice of words. The opinion cites Phelps v. Wolff, 74 Neb. 44, 103 N. W. 1062. The language there used states the correct rule: "A nunc pro tunc judgment must conform to and be no broader in its terms than the one originally rendered," meaning the one originally determined and made but not entered.

We have also held: "The order nunc pro tunc may be supported by the judge's notes, court files, or other entries of record. It may also be based upon other evidence, oral or written, which is sufficient to satisfy the court that the order is required to make the record reflect the truth." Fisher v. Minor, *ante* p. 247, 66 N. W. 2d 557.

We review the order subject to the following established rule: "On appeal to the Supreme Court from an order of the Nebraska State Railway Commission, while acting within its jurisdiction, the question for determination is the sufficiency of the evidence to prove that the order is not unreasonable or arbitrary." In re Application of Moritz, 153 Neb. 206, 43 N. W. 2d 603.

What, then, is the evidence upon which the challenged order was based?

Defendant's application for a certificate under the grandfather clause is in evidence. As to its irregular route operations as of April 1, 1936, it is stated that it obtained the main volume of its traffic in Omaha, Lincoln, Hastings, and Grand Island and that that traffic was transported to "All points within the state." Following that, in answer to a requirement to "describe operations clearly and in detail," applicant answered: "Since 1914, applicant has held himself out for general hauling, * * * from and to all points within the said state of Nebraska." The evidence taken at the hearing on the application under the grandfather clause before the examiner for the commission is shown. The witness for defendant was asked to state "briefly what the gen-

eral nature of the operations intrastate are." He outlined the regular routes, followed by: "And irregular routes for the entire State of Nebraska." The witness then in answer to questions described more in detail the regular route operations and a "somewhat irregular" regular route from Lincoln to Beatrice. The witness was then asked (with reference to irregular route operations) from where the "main volume of traffic" was obtained. The answer was Omaha, Lincoln, Hastings, and Grand Island and that from those points traffic was transported to and from various points in the state. These answers obviously relate to the "main volume of traffic." It does not appear that the witness was asked as to irregular route traffic not in the "main volume" class. The witness was then asked if an exhibit was a fair cross section of the irregular route operations. The witness answered "No." The exhibit shows nine shipments either from Omaha, to Omaha, or from Hastings. The transcript of the hearing then shows "the applicant produced his files or manifest sheets showing movements of commodities generally, * * * by days, during the year 1936 up to April 1, 1936, and to and from various points in the state of Nebraska at large."

At the conclusion of the hearing the examiner stated: "My recommendation will be to the Commission that a certificate of public convenience and necessity be granted to your company in operations the same as you have related under your regular and irregular route operations."

The examiner's report to the commission dated November 6, 1937, is in the record. It recites findings as to irregular routes that the defendant obtained its main volume of traffic from Omaha, Lincoln, Hastings, and Grand Island; that he transported his main volume of traffic to and from various points in the state of Nebraska at large; and that "on and since April 1, 1936, said applicant has operated to and from various points in the state of Nebraska at large." He recommended

an order in accordance with the above findings. The record shows a signed approval of this report by Commissioners Bollen and Good.

The commission met on November 16, 1937. Its records recite that "Examiners' reports having been approved by the Commission" it was moved that the "following form M-1 applications be granted as common carriers, * * *." In a list of over 200 applications appears that of Matthew Leo McKeone, Omaha.

Thereafter, the commission on November 24, 1937, issued the formal certificate to defendant. This was over the signature of the chairman and secretary. It recited a finding that "the report of Examiner having been approved and concurred in" that applicant was entitled to a certificate and "An appropriate order will be entered." The order follows and, as to irregular route operations, it authorized service "From Omaha, Lincoln, Hastings and Grand Island, Nebraska to and from various points in the State of Nebraska at large."

The commission, in its findings in the order of April 14, 1953, dismissing the petition of plaintiffs, stated: "Thereafter on November 24, 1937, the Commission entered its order approving the Report and Recommendation of the examiner which, according to the practice then followed, constituted the order of the Commission and a certificate of even date * * * was issued over the signature of the Chairman of the Commission."

Defendant attached to its application for the nunc pro tunc order the affidavit of Mr. McKeone, Sr. In Harris v. Jennings, 64 Neb. 80, 89 N. W. 625, 97 Am. S. R. 635, we accepted affidavits as evidence to sustain a nunc pro tunc order. In that affidavit, he affirmed that since "1925 he had always held himself out to and actually physically conducted operations over irregular routes to and from all points in the State of Nebraska when called upon to do so"; that prior to April 1, 1936, "he conducted operations in the transportation of general commodities * * *, to and from various points all over

the entire State of Nebraska"; he recited such "extensive operations to and from various points over the entire state" during the years 1932 to 1935, inclusive; he affirmed that he was a witness before the examiner in 1937 and there produced evidence supporting the finding of the examiner and that since that time he and the succeeding partnership had continued to transport commodities between all points in Nebraska on an irregular route basis and was presently doing so; and that only "recently" was the discovery made that the operating authority as written did not include operations to and from all points in Nebraska.

Such, then, is the evidence which the commission had before it when it entered the nunc pro tunc order. The evidence is sufficient to bring the order within the rules defining the scope of a nunc pro tunc order. The evidence is sufficient to show that the order was not unreasonable nor arbitrary.

Plaintiffs further contend that defendant slept upon its rights and remained silent for nearly 15 years, and is guilty of laches and a right to relief is barred. Assuming, but not deciding, that laches is a doctrine applicable within the powers of the commission, we find no merit in the contention.

The passage of approximately 15 years between the entry of the two orders here involved is certain. Laches is an equitable doctrine. Laches does not grow out of the mere passage of time. Miller v. Miller, 153 Neb. 890, 46 N. W. 2d 618.

Plaintiffs assert that no charge is made that they in any manner induced or caused the defendant to remain silent and to sleep upon its rights. That appears to be correct. Plaintiffs further state that no explanation is made nor does one appear in either the petition for the nunc pro tunc order or in the order based thereon revealing why the defendant remained silent for 15 years. The argument here is based upon the premise of unexplained silence. The record is to the contrary. The

petition for the nunc pro tunc order alleged defendant, while operating under the grandfather certificate and the certificate to the partnership, did not realize that the certificates did not cover the transportation of commodities between all points and places in the state at large; that, believing it had that authority, it did operate between all points in Nebraska on an irregular route basis; that it had conducted its operations on that basis; and that only recently it had discovered the certificates did not properly recite the authority to which it was entitled, and hence the petition for a nunc pro tunc order. These allegations are referred to by the commission in its findings in the nunc pro tunc order. Plaintiffs overlook, likewise, the affidavit of Mr. McKeone, referred to above herein, made in support of that explanation. It is attached to the petition and was received in evidence in this proceeding.

In Baxter v. National Mtg. Loan Co., 128 Neb. 537, 259 N. W. 630, we held: "Where the petition of a plaintiff who has slumbered long upon his rights shows apparent laches on its face, the suitor must generally account for and excuse his delay by proper allegations in his pleading, and must support such allegations by proof."

Defendant here complied with that requirement.

Concluding as we do that the attack upon the nunc pro tunc order as such is without merit, we do not explore nor decide the effect of the consolidation order of December 2, 1952, upon which the commission also relied in holding that the issue presented was moot.

The order of the commission is affirmed.

AFFIRMED.

STATE OF NEBRASKA EX REL. O'NEILL F. HAMILTON ET AL., APPELLANTS, V. CHARLES A. BOILER, GUARDIAN, ET AL., APPELLEES.

67 N. W. 2d 458

Filed December 17, 1954. No. 33554.

1. **Habeas Corpus: Infants.** Habeas corpus is a proper remedy to determine a controversy concerning the right of custody of an infant.
2. ———: ———. Such proceedings are governed by considerations of expediency and equity, and should not be bound by technical rules of practice.
3. **Habeas Corpus: Appeal and Error.** The writ of habeas corpus is not a corrective remedy, and is never allowed as a substitute for appeal or proceeding in error.
4. **Appeal and Error.** Where the evidence on material questions of fact in a case such as the instant case is in irreconcilable conflict, this court will, in determining the weight of the evidence, consider the fact that the trial court observed the witnesses and their manner of testifying, and must have accepted one version of the facts rather than the opposite.
5. **Parent and Child.** A court may not deprive a parent of the custody of his child unless it be shown that such parent is unfit to perform the duties imposed by the relation or has forfeited the right.
6. ———. Where both natural parents are dead, the custody of a minor child will be determined solely on the basis of what is for the best interests of the child.
7. ———. In such a situation the welfare of the child is the primary consideration to which all other considerations must yield.

APPEAL from the district court for Douglas County: CARROLL O. STAUFFER, JUDGE. *Affirmed.*

Burbridge & Burbridge, for appellants.

Swarr, May, Royce, Smith & Story, for appellees.

Heard before SIMMONS, C. J., CARTER, MESSMORE, YEAGER, CHAPPELL, WENKE, and BOSLAUGH, JJ.

WENKE, J.

This is a habeas corpus action brought in the district court for Douglas County by the paternal and maternal

grandparents and paternal uncles of Christyne Rae McCoy, a minor then of the age of about 5½ years, against Charles A. Boiler, her foster father and guardian. The purpose of the action is to obtain custody of the minor child for the relators, or one of them, and to take her from the respondent. The trial court denied the writ on the ground that the child was not being unlawfully detained by respondent. Relators thereupon filed a motion for new trial and have appealed to this court from the trial court's overruling thereof.

"Habeas corpus is a proper remedy to determine the controversy concerning the rights of custody of infants." Hanson v. Hanson, 150 Neb. 337, 34 N. W. 2d 388. See, also, In re Application of Schwartzkopf, 149 Neb. 460, 31 N. W. 2d 294; Lemke v. Guthmann, 105 Neb. 251, 181 N. W. 132.

"* * * Such proceedings are governed by considerations of expediency and equity, and should not be bound by technical rules of practice." Barnes v. Morash, 156 Neb. 721, 57 N. W. 2d 783. See, also, In re Application of Reed, 152 Neb. 819, 43 N. W. 2d 161; In re Application of Schwartzkopf, *supra.*

Respondent, in response to the writ issued, filed a plea in abatement and, on the basis thereof, moved that the writ be quashed. This plea he renewed in his answer and return. The plea is based on the following facts: On May 27, 1953, respondent filed a petition in the county court of Douglas County to be appointed guardian of Christyne Rae McCoy, a minor. On the same day he was appointed her guardian by that court. For the county court's authority to do so, see section 38-104, R. R. S. 1943. On May 28, 1953, respondent qualified as guardian of the person and estate of the minor. Under the circumstances here this gave him the lawful custody of Christyne. See § 38-108, R. R. S. 1943. Thereafter, on August 24, 1953, the parties who are relators herein filed a motion in the county court to vacate and set aside the guardianship. A hearing was

had on this motion on August 29, 1953. It was overruled. No appeal has been taken therefrom.

Ruling on this plea and motion was deferred by the trial court and none was ever made directly thereon except whatever may be the effect in that regard of the court's denial of the writ, which is based on the court's finding that the respondent was not unlawfully detaining the child.

We held in In re Application of Schwartzkopf, *supra:* "The writ of habeas corpus is not a corrective remedy, and is never allowed as a substitute for appeal or proceedings in error."

Here the parties fully tried the case on its merits and no objection was made to that procedure by either. Apparently the court determined it on that basis. In a comparable situation in State ex rel. Bize v. Young, 121 Neb. 619, 237 N. W. 677, wherein we considered the appeal on its merits, we said: "Without announcing it as having the force of a binding rule in this jurisdiction, it may be said, in the discharge of this high trust and duty, American courts of excellent standing unquestionably adhere to the principle that, 'So far as the interests and rights of the child itself are concerned the court is not bound by any previous adjudication.' 10 Standard Ency. of Procedure, 953." The situation here being comparable, we shall follow the same course.

In order to better understand the problem presented we think it advisable to fill in some background. Jeannine, the daughter of O'Neill and Alma Hamilton of Omaha, Nebraska, was born on August 13, 1929. On March 22, 1947, she was married to Dr. Raymond McCoy, a son of George and Selma McCoy of near Tecumseh, Nebraska. Two children were born to this marriage: Christyne Rae, a daughter, on February 11, 1948, and Denise, a daughter, on February 28, 1950. Denise died on April 16, 1950. Dr. and Mrs. Raymond McCoy went to Europe in July 1949, he being then in the military service of his country. On shipboard, while traveling

to Europe, both became seriously ill, he being stricken with poliomyelitis. This illness resulted in their early return to this country, arriving back here on August 28, 1949. The doctor sufficiently recovered to open up an office for the practice of medicine at Tecumseh, Nebraska. Shortly after doing so he suddenly died on July 3, 1951, of a heart attack. Jeannine and her infant daughter, Christyne, shortly thereafter returned to her parents' home in Omaha, where they all lived together at 5018 Cass Street. This was in September 1951. Dr. McCoy had three brothers; namely, Don of Omaha, Wayne of Tecumseh, and George of Lincoln. These brothers are all married and have families. All of the foregoing blood relatives are the relators in this proceeding.

Respondent, Charles Boiler, was born on November 6, 1927, to Charles and Josephine Boiler. His father was accidentally drowned in 1938 and thereafter he, his sister, and their mother had to make their own living. The mother never remarried. He was graduated from Abraham Lincoln High School in Council Bluffs, Iowa, in June 1945. He thereafter, on July 3, 1945, volunteered his services to his country by enlisting in the United States Marine Corps and served therein until August 21, 1946, when he was honorably discharged. In the fall of 1947 respondent entered the University of Omaha under the GI Bill of Rights. He attended the University during the school years of 1947-1948, 1948-1949, 1949-1950, and then during the summer session of 1950. Meanwhile, on January 21, 1948, he had enlisted for 4 years in the United States Marine Corps Reserves. On October 11, 1950, he was called to active duty and sent to Korea. He there served his country in active front-line duty for almost 6 months until he was wounded for the second time. As a result thereof he was released from active duty on November 2, 1951, although he suffered no permanent ill effects from the wounds received. He thereupon immediately obtained employment. On Janu-

ary 20, 1953, he was honorably discharged from the United States Marine Corps Reserves. The record shows that at all times since his father's death respondent has worked at every opportunity to support himself and obtain an education.

About February 1, 1952, respondent resumed his studies at the University of Omaha. There he renewed his acquaintance with Jeannine who was also attending the University. They had first met in the fall of 1951. Shortly thereafter they were married. They were married on April 25, 1952, in the Trinity Lutheran Church in Omaha. They first lived at 5018 Cass Street but in August 1952 moved to a duplex at 3552 North 60th Street in Omaha which is still the Boiler home. After the marriage respondent continued his education but Jeannine dropped her schooling. Respondent completed his education the forepart of July 1952, obtaining a degree of Bachelor of Science in Education. Thereafter, on July 21, 1952, he obtained employment with the Mutual Benefit Health and Accident Association of Omaha and has continued working for the company ever since.

A child was born to this marriage on December 20, 1952. It was a boy whom they named Jeffrey. Jeannine suddenly died on May 26, 1953. She apparently died from a sudden respiratory failure secondary to a compression of the brain stem. Respondent testified her death was immediately preceded by a convulsive attack. It seems that following the death of her baby Denise on April 16, 1950, Jeannine became subject to periodic convulsive seizures resulting in fainting spells. The record shows she first consulted Dr. Lehnhoff, her personal physician, about this condition in March 1951. These seizures occurred intermittently during 1951, seldom in 1952, but more often beginning with the forepart of February 1953. After Jeannine died respondent continued to maintain the home. His mother moved in with him and he hired a housekeeper. This trouble apparently came to a head in the forepart of August 1953

when respondent would no longer let Christyne go to the home of the Hamiltons or let them visit her. The reason for this latter action on respondent's part is hereinafter fully discussed.

The evidence presents two contrasting pictures and in view thereof the following principle has particular application: "Where the evidence on material questions of fact in a case such as the instant case is in irreconcilable conflict, this court will, in determining the weight of the evidence, consider the fact that the trial court observed the witnesses and their manner of testifying, and must have accepted one version of the facts rather than the opposite." Barnes v. Morash, *supra*. See, also, Lichtenberg v. Lichtenberg, 154 Neb. 278, 47 N. W. 2d 575; Lakey v. Gudgel, 158 Neb. 116, 62 N. W. 2d 525.

After their marriage the Boilers lived a normal happy life such as we usually think of in connection with newly married couples. This included their attending numerous social functions. Into this family Christyne was accepted as their own child and she received and returned the love and affection of both. This love and affection between the child and respondent has continued since the mother's death. In fact it was the wish of the mother and the desire of respondent that he adopt Christyne. They consulted an attorney for this purpose. This would undoubtedly have occurred except for an unfortunate misunderstanding on their part that such adoption would stop certain payments the child was receiving from the government based on her natural father's death. They never learned of this misunderstanding in Jeannine's lifetime. Consequently this wish and desire of these parties was never carried out although in this regard Jeannine requested of respondent a promise that if anything ever happened to her that he would raise both children. This he promised her he would do. After her death respondent filed a petition in the county court of Douglas County for the purpose of adopting

Christyne. That action is apparently still pending. While the normal happy life of this couple was momentarily disrupted in March 1953 when Jeannine consulted an attorney about a divorce this incident was almost immediately forgotten by both. In fact at the time of her death Jeannine had been pregnant for about a month.

After the unfortunate and untimely death of his wife respondent made satisfactory arrangements for maintaining his home. The home is an attractive duplex located in a newly developed area. It is in a very pleasant neighborhood with wide streets and well-kept lawns. The home itself is comfortably and attractively furnished. It is well kept and run with ease and without confusion or frustration. Christyne has her own room. In the neighborhood there are many children of Christyne's age with whom she can and does play. The child appears to be well kept and is normal and healthy in every respect. She is well behaved and happy.

During her lifetime the mother enrolled Christyne in the kindergarten at Brownell Hall and she started attending on April 6, 1953. It was the mother's desire that Christyne should attend Brownell Hall for the first eight grades of her education. This desire the respondent is fulfilling and the child is presently attending that school where she seems to be well adjusted to her surroundings.

The natural father and mother of Christyne were married in a Lutheran church, she having been baptized and raised in that faith, and they had Christyne baptized therein. The mother had expressed her desire to respondent to have her children raised in that faith. Since the mother's death Christyne has been and is regularly attending Sunday school conducted by the Immanuel Lutheran Church located at 60th and Military Streets, respondent taking her there every Sunday. It is also respondent's intention to have Jeffrey baptized and raised in the Lutheran faith, although he, at the present time, does not belong to any church.

A court may not deprive a parent of the custody of his child unless it be shown that such parent is unfit to perform the duties imposed by the relation or has forfeited the right. See, Lemke v. Guthmann, *supra;* In re Application of Schwartzkopf, *supra;* In re Guardianship of Herten, 127 Neb. 88, 254 N. W. 698.

We mention this principle here in view of respondent's son, Jeffrey, and what is hereinafter said in that connection.

However, where both natural parents are dead, the custody of the child will be determined solely on the basis of what is for the best interests of the child. See, Gorsuch v. Gorsuch, on rehearing, 143 Neb. 578, 11 N. W. 2d 456; Lakey v. Gudgel, *supra.*

In such a situation the welfare of the child is the primary consideration to which all other considerations must yield. See, In re Guardianship of Herten, *supra;* Steward v. Elliott, 113 Neb. 421, 203 N. W. 580; Barnes v. Morash, *supra.*

As stated in Steward v. Elliott, *supra,* quoting from Schroeder v. State, 41 Neb. 745, 60 N. W. 89: " 'In a controversy for the custody of an infant of tender years, the court will consider the best interests of the child, and will make such order for its custody as will be for its welfare, without reference to the wishes of the parties.' "

Under the situation here the following language from Kaufmann v. Kaufmann, 140 Neb. 299, 299 N. W. 617, has application: "The question involves the study of the proposed home itself, and its entire surroundings, the temporal welfare of the child, as to food, clothing, discipline, and, if of tender years, careful nursing when required, and medical attention. Then the court must consider its spiritual and religious care and upbringing, and whether it will have loving care, with understanding and affection: * * *."

In this regard we said in In re Guardianship of Herten, *supra:* "In considering the proper custody of minor

children, the expressed wish of a dying father should always be given great weight by the court, but it does not relieve the court from the responsibility of determining from all the evidence the one question of paramount consideration, i.e., what is now for the best interests of the child."

However, while in no sense controlling, a court should, in arriving at its decision, consider the natural parents' religious beliefs and their desires in that regard. See State ex rel. Bize v. Young, *supra.*

We have also said that unless their best interests absolutely require it be done that children of tender years should not be separated from each other or from those to whom they have become attached. See, In re Guardianship of Herten, *supra;* Kaufmann v. Kaufmann, *supra.*

Is respondent a fit and proper person to have the custody of the child? The evidence shows he is a fine young man of splendid moral character. He would appear to be a good example of young American manhood. He has served his country faithfully and well and by his own industry has prepared himself for his life's work. We certainly think he is a fit and proper person for that purpose.

Would it be for the child's best interests to remain in his custody? We have already fully discussed the home in which she would live, the education she would receive, and the religious belief in which she is being raised. We have, also, related the fine relationship and affection that exists in the home between all the members thereof, particularly between Christyne, Jeffrey, and respondent. The record shows that respondent has made fine progress in his chosen field of work and is fully capable of financially maintaining his home at the standard it has been and he will, undoubtedly, raise it far above that level.

Because of what we have hereinbefore set forth, we have come to the conclusion, all things considered, that it would be for the best interests of Christyne to leave her in the custody of respondent, where she has been

since May 1952, and let her grow up there with Jeffrey, her half brother, to whom she has become very closely attached. We recognize relators introduced evidence contrary to the findings we have herein made but we think our findings reflect the situation as it actually exists. In arriving at our decision we have not overlooked nor failed to consider that the relators are all blood relatives of Christyne and all have good homes in which Christyne could be raised but she cannot be raised in more than one home. Christyne should be permitted to have normal relations with these relatives by reasonable visitations in their homes, if they so desire, or by their visiting her in respondent's home. Respondent has expressed his approval of such relations and his willingness to see that it is fulfilled.

However, in this regard, we wish to make the following observation: It is apparent the maternal grandmother has pronounced likes and dislikes of people and in this regard does not always practice self-restraint. She first met respondent when he came to her home to court her daughter. This was in the forepart of February 1952. At that time she developed a pronounced dislike for him. She classified him in a very undesirable category and in no uncertain language advised him thereof. This unfortunate statement by her was undoubtedly the beginning of the strained relationship that has continued to exist between the two. After Jeannine's death this continued dislike caused her to try to poison Christyne's mind against respondent at every possible opportunity. This action on her part resulted in respondent denying her the right to see Christyne or having Christyne visit in her home. We think the record justifies the action respondent took. Unless the maternal grandmother can curb this tendency respondent would be fully justified in continuing to deny her the privilege of seeing the child. Only time can answer this question.

Much is said of what the relators testified they intended to do with the property Christyne inherited from

her father and mother if they, or any one of them, were given her custody. Her estate is under guardianship in the county court of Douglas County and subject to the supervision of that court. It can only be lawfully expended in such manner and for such purposes as that court may lawfully authorize. We are not here concerned with that question.

The record is voluminous and we have not endeavored to set it out in detail. To do so would serve no useful purpose. We find the custody of Christyne should be left with respondent and that, in view thereof, the action of the trial court denying the writ should be and is affirmed.

AFFIRMED.

STATE OF NEBRASKA EX REL. NEBRASKA STATE BAR ASSOCIATION, RELATOR, V. LESTER C. HUNGERFORD, RESPONDENT.

67 N. W. 2d 468

Filed December 28, 1954. No. 33435.

1. **Attorney and Client.** When an attorney is shown to have converted funds to his own use which he held as referee in a partition suit, and refused to account for same for more than 3 years, he is subject to disbarment.
2. ———. In admitting a lawyer to the bar and granting him a license to practice law, it is with the understanding that he will faithfully discharge his duties, uphold and obey the Constitution and laws of the state, observe established standards and codes of professional ethics, maintain the respect due to courts of justice, and abstain from all offensive practices which cast reproach on courts and the profession of law.
3. ———. A restitution of funds wrongfully converted by a lawyer, after he is faced with legal accountability, is not an exoneration of his professional misconduct.

Original action. *Judgment of disbarment.*

Clarence S. Beck, Attorney General, and *Robert A. Nelson,* for relator.

Lester C. Hungerford, pro se.

Heard before SIMMONS, C. J., CARTER, MESSMORE, YEAGER, CHAPPELL, WENKE, and BOSLAUGH, JJ.

CARTER, J.

This is an original disciplinary proceeding initiated by the relator, Nebraska State Bar Association, against the respondent, Lester C. Hungerford, a lawyer, who is duly licensed and admitted to the practice of law in this state.

The formal complaint is in two counts, each asserting conduct on the part of the respondent alleged to be in violation of his duties and obligations as a practicing lawyer. After the filing of the complaint the matter was referred to Lester A. Danielson, referee, for hearing, report, and recommendation. A hearing was had and the report of the referee filed with this court in which it was determined that the charge contained in Count 1 was not sustained by sufficient evidence. As to Count 2, the referee found that the charge was established and recommended that disciplinary action be taken against the respondent. The respondent filed no exceptions to the report of the referee. The matter is before this court on the motion of the Attorney General for a final judgment pursuant to Rule 8, Rules of the Supreme Court, governing disciplinary proceedings, and for an order disbarring the respondent, Lester C. Hungerford.

We shall not undertake to review the record relating to Count 1, on which the referee found the evidence to be insufficient to sustain the charge, in view of the conclusion we have reached as to Count 2.

It is alleged in Count 2 of the complaint that respondent was appointed referee in a partition proceeding in the district court for Hooker County, Nebraska, entitled Hayward v. Coombes. He furnished bond, qualified as referee, and sold the real estate involved to

Coombes for $5,320. The sale was confirmed on August 5, 1947. Coombes was the owner of a two-thirds interest in the land, Hayward being the owner of the other one-third. The total expense connected with the partition amounted to $426.70. Hayward was therefore entitled to $1,631.10 for his one-third interest in the real estate.

The record discloses that Coombes paid respondent $466.67 on July 7, 1947; $131.25 on July 10, 1947; and $1,175.41 on July 24, 1947; a total sum of $1,773.33. This money was deposited in a joint account in the Bank of Mullen with respondent and the clerk of the district court as joint depositors. On July 26, 1947, respondent transferred the joint account to the Hungerford Trust Account in the Bank of Mullen. From July 28, 1947, to November 13, 1947, respondent drew 43 checks on this trust account, reducing it from $1,773.33 to $1.24.

The record shows further that respondent excused his refusal to distribute the money realized from the sale of the real estate on the ground that Coombes had not paid in sufficient funds to pay up the costs. It is true that after the payments by Coombes in the total amount of $1,773.33 had been made, $284.46 remained to be paid by him. This amount was paid by Coombes on May 20, 1948. Respondent cashed this check and converted it to his own use. It is clear therefore that Coombes had paid in the full amount owing on the land involved in the partition suit on May 20, 1948. The respondent paid $366.05 on the expenses of the partition suit and converted the remaining $1,690.50 to his personal use.

The attorney for plaintiff in the partition suit was Carl G. Humphrey of Mullen, Nebraska. Humphrey demanded an accounting of the funds on the following dates: June 28, 1948; July 9, 1948; November 4, 1948; March 2, 1949; April 15, 1949; January 23, 1951; February 27, 1951; and July 2, 1951.

On September 14, 1951, respondent deposited $1,750 in his trust account and paid up the amounts owing. Respondent states that he had this money in a bank at Holdrege, Nebraska, in his mother's name for reasons which are immaterial to this proceeding. It is quite evident that he obtained the money from his mother to pay up the shortage in his account which had existed for more than 3 years.

The respondent is engaged in the practice of law at Hyannis, Nebraska. He was graduated from law school in 1932 and was admitted to the bar immediately thereafter. He commenced the practice of law at Friend, Nebraska, where he remained for about 4 years. He thereafter practiced at Holdrege for a time and then took a position as a cost accountant for a construction company in Alaska. In 1945 he commenced the practice of law in Bozeman, Montana, where he remained for something over a year. In 1946 he came to Hyannis where he has since practiced.

" 'In granting a license to practice law it is on the implied understanding that the party receiving it shall in all things demean himself in a proper manner, and abstain from such practices as cannot fail to bring discredit upon himself, the profession, and the courts.' " State ex rel. Sorensen v. Scoville, 123 Neb. 457, 243 N. W. 269.

"The purpose of a disbarment proceeding is not so much to punish the attorney as it is to determine in the public interest whether he should be permitted to practice." State ex rel. Spillman v. Priest, 123 Neb. 241, 242 N. W. 433.

"An attorney, as an officer of this court, must so conduct himself as to assist in maintaining confidence in the integrity and impartiality of the courts." State ex rel. Sorensen v. Goldman, 127 Neb. 340, 255 N. W. 32.

"An attorney owes his first duty to the court. He assumed his obligations toward it before he ever had a client. His oath requires him to be absolutely honest

even though his client's interests may seem to require a contrary course. A lawyer cannot serve two masters; and the one he has undertaken to serve primarily is the court.

"A duty rests on the courts to maintain the integrity of the legal profession by disbarring attorneys who indulge in practices designed to bring the courts or the profession into disrepute, or to perpetrate a fraud on the courts, or to corrupt and defeat the administration of justice." State ex rel. Nebraska State Bar Assn. v. Niklaus, 149 Neb. 859, 33 N. W. 2d 145.

"Canons of ethics and rules governing professional conduct among attorneys are recognized and applied by courts in proper cases." State ex rel. Hunter v. Crocker, 132 Neb. 214, 271 N. W. 444.

"Money of the client or collected for the client or other trust property coming into the possession of the lawyer should be reported and accounted for promptly, and should not under any circumstances be commingled with his own or be used by him." Canon 11, Canons of Professional Ethics of American Bar Association. See, also, Part IV, Article X, Rules of the Supreme Court.

In this case the respondent not only violated his obligation as an attorney at law by misappropriating and converting $1,690.50 to his own use, but he violated his oath and obligation as a referee in so doing. He not only brought discredit upon the profession of the law but he brought discredit upon the courts and failed in a position of trust while acting as an arm of the court that appointed him. He has been found wanting in integrity, honesty, and good moral character. He thereby forfeits his license to practice the profession of law, the attributes of which require fidelity, trustworthiness, and good moral character in order for one to be admitted to practice, and the profession requires the continuance of those attributes during the time he is so engaged.

Relator attempts to excuse his conduct on the ground

that, although he was lax in his methods, it was nothing more than mere carelessness, since he had adequate funds at all times with which to pay the obligation. This assertion is based on the unsupported statement of the relator that he had adequate funds in a Holdrege bank in the name of his mother upon which he was authorized to draw. While it would appear under the circumstances of this case that the mother of relator came to his aid when the time drew near for a legal accounting, he could not be absolved of guilt even if his statement was literally true. We know of no rule that one possessed of funds or property may not be guilty of appropriating and converting the funds or property of others to his own use. The respondent did pay off the financial obligations which devolved upon him in his capacity as referee on September 14, 1951, more than 3 years after he should have done so. He placed the money derived from the sale, except the item of $284.46, in a trust account. He used this earmarked money for his personal use. The check for $284.46 was cashed and used by respondent without it being deposited in a bank. Restitution of funds willfully converted by an attorney is not an exoneration of his professional misconduct. On this question we have said: "We cannot condone respondent's conduct simply because he attempted to make restitution after he was faced with the issue of legal accountability. * * * Mere restitution of funds wilfully converted by an attorney is not a professional exoneration." State ex rel. Nebraska State Bar Assn. v. Hyde, 138 Neb. 541, 293 N. W. 408.

An order of disbarment is required. Respondent will accordingly be disbarred from the practice of law in this state, his license to practice is cancelled, and his name is ordered stricken from the roll of lawyers.

JUDGMENT OF DISBARMENT.

JOHNNIE BELL, PLAINTIFF IN ERROR, V. STATE OF NEBRASKA, DEFENDANT IN ERROR.

67 N. W. 2d 762

Filed December 28, 1954. No. 33522.

1. **Trial.** To render the failure to give an instruction prejudicially erroneous, it is not sufficient that correct abstract propositions of law are therein embodied, but in addition it is requisite that such propositions be applicable to facts, at least in some degree, inferable from the evidence.
2. ———. An instruction which submits an issue to the jury not raised or supported by the evidence is erroneous and should be refused.
3. ———. An instruction which, in addition to a correct statement of the law, contains an assumption of the existence of a material fact upon which there was no evidence offered or received, and directs the attention of the jury to, and unduly emphasizes a part of, the evidence, should be refused.
4. ———. It is not error for the trial court to refuse to give requested instructions which have no application or relevancy to the evidence adduced in the case, which are not supported by evidence, or which erroneously state the applicable principles of law, or where, in the light of all the instructions given, their refusal was not prejudicial to the defendant.
5. ———. Instructions to a jury must be considered together, so that they may be properly understood, and, if as a whole they fairly state the law applicable to the evidence when so construed, error cannot be predicated on the giving thereof.
6. **Appeal and Error: Criminal Law.** Section 29-2308, R. R. S. 1943, provides that no judgment shall be set aside, or new trial granted, or judgment rendered in any criminal case, on the grounds of misdirection of the jury if the Supreme Court, after an examination of the entire cause, shall consider that no substantial miscarriage of justice has actually occurred.
7. **Trial: Appeal and Error.** Misdirection of a jury not causing a substantial miscarriage of justice does not require that a judgment shall be set aside.
8. **Appeal and Error: Criminal Law.** Section 29-2308, R. R. S. 1943, which authorizes the Supreme Court to reduce a sentence when in its opinion the sentence is excessive, was not intended by the Legislature as a directive to the Supreme Court to reduce the sentence in every instance where it is asked, but only in those cases where it is apparent that the trial court has abused its judicial discretion and fixed a penalty which is clearly excessive.

ERROR to the district court for Douglas County: JAMES T. ENGLISH, JUDGE. *Affirmed.*

Grenville P. North, for plaintiff in error.

Clarence S. Beck, Attorney General, and *Homer L. Kyle,* for defendant in error.

Heard before SIMMONS, C. J., CARTER, MESSMORE, YEAGER, CHAPPELL, WENKE, and BOSLAUGH, JJ.

MESSMORE, J.

The defendant, Johnnie Bell, was charged in an information with the crime of assault with intent to kill, wound, or maim. He was found guilty of the lesser offense included in the information, assault with intent to inflict great bodily injury. The defendant filed a motion for new trial which was overruled. The trial court sentenced the defendant to a term of 4 years at hard labor in the Nebraska State Penitentiary. The defendant appealed.

The record discloses that Jessie Powell, the prosecuting witness, left his home at about noon on May 25, 1952, and proceeded to the home of Percy Holmes where he purchased his breakfast. While he was there a disturbance occurred between a man and a woman. The man pulled a gun out of his pocket. Powell got up from the table, knocked the gun from the man's hand, picked it up and put it in his pocket, and left with a lady friend who was there. Later Powell arrived at the Brown Bomber, also known as the Elite Club, a gambling place. He checked the gun at the door and went into the gambling room where he placed a bet with the defendant Johnnie Bell. An argument ensued with reference to the bet between Powell and the defendant. Powell also complained to the houseman. The defendant picked up the money and walked out of the Elite Club. Powell retrieved the gun, put it in his pocket, and went next door to the Apex Bar where he met the defendant and asked the defendant to give him his money back.

He put his hand in the defendant's face and said to him: "Anytime you put my money out I am going to take it." The defendant told Powell, "Don't you be here when I get back, I'm going home." Powell then left the Apex Bar and asked a man he knew to take him home, saying that he had a gun in his pocket and wanted to go home. This fellow refused. Powell then turned and walked north on Twenty-fourth Street where he was accosted by a fellow who asked him if he did not pick up a gun at the place where the argument occurred, the Percy Holmes residence. Powell replied that he did, and the fellow said: "Well, give it to me." Powell gave him the gun, then turned south, and was proceeding south when he saw the defendant on the running board of a car aiming a single-barreled shotgun at him. Powell testified that the defendant said a few words that he could not make out. The defendant then said: "I am going to kill you," and shot at Powell. The first shot hit Powell in the head and face and he staggered and fell behind a car. He made an effort to get up and succeeded in doing so. He tried to run up Parker Street, and the defendant shot at him again, hitting him in the back. He fell on his face and laid there until the ambulance came and took him to the County Hospital. As a result of his wounds, Powell's right eye was removed and his left eye impaired to the extent that he could only perceive light and shadow.

The defendant Bell's version of the incident varies to some extent from that of the prosecuting witness Powell. The defendant testified that he had resided in Omaha for 6 years and 2 months, and was employed at the Cudahy Packing Company. Previous to coming to Omaha, he was engaged in farming in Missouri. On May 25, 1952, he left his home about noon and stopped at the Apex Bar. While standing between the bar and a table talking to his friend Willie Jones who was sitting at the table, Powell came in, put his arm around the defendant's shoulder, and drew a gun from his

pocket. He put the gun to the side of the defendant's head, and the defendant thought he tried to pull the trigger. Powell said to the defendant: "I am going to kill you." The defendant said: "What do you want to kill me for? I ain't done nothing to you." Powell put the gun down and walked out the door. The defendant thought Powell was gone. The defendant then left the Apex Bar, and Powell was just outside the door. He put a gun to the defendant's stomach and said: "I should kill you now." Powell then went down the street toward the Brown Bomber. The defendant went home, a distance of about 4 blocks from the Apex Bar, to get his gun, testifying that he was scared. He got his gun and went back, driving his car. He passed Powell at Parker Street, going south. He stopped his car in the street by the light post near the Apex Bar. He got out of his car, saw Powell with his hand in his waistcoat, and told him to stop. Powell was pulling a pistol out, and the defendant testified, "I hollered 'stop.'" The defendant also testified that he shot with the intention of scaring Powell. Powell ducked behind a car and came up with a pistol in his hand. The defendant reloaded his shotgun and fired a second shot. When Powell saw that the defendant was going to shoot again, he turned and started to run. The defendant then went home and told his wife to call the law so he could give himself up. Police officers testified that the defendant did give himself up voluntarily.

Percy Holmes testified that Powell came to his home, secured a blue steel automatic gun after a scuffle occurred in the home, and took the gun with him after threatening people who were in the house.

The defendant's witness, Willie Jones, testified to seeing Powell about 4 p. m. put a blue steel automatic gun against the head of the defendant when they were in the Apex Bar without any conversation taking place between Powell and the defendant.

A witness for the defendant testified that he saw

Powell in the Elite Club before the shooting; that Powell had a pistol and was wrestling around with it; and that somebody took the pistol away from Powell. He also testified that he saw the defendant shoot Powell, the first shot being fired from a distance of about 30 feet.

A witness for the State testified that about 4 p. m., he was in front of the Apex Bar, parked on the right or west side of the street facing south. He saw Powell when Powell came to the car and requested this witness to drive him home, stating that he had a gun. He showed the gun to this witness, and the witness declined to drive Powell home. Powell then proceeded west around the car onto the sidewalk on the west side of the car. The witness paid no further attention to Powell. He heard a shot, looked to the south, and saw the defendant with a shotgun. Powell was staggering. This witness did not know what either Powell or the defendant did after that; he ran from the scene of the shooting.

Another witness for the State testified that she and one Marie Wilson were on her front porch talking. She saw the defendant on the corner. Powell was running, and the defendant fired a shot which hit Powell and he fell.

The witness Marie Wilson testified that she was on her way to the Collins' house when she saw the defendant shoot Powell. At that time she was in front of the Apex Bar. Defendant was standing with his back facing south; Powell was standing with his back facing north. She also saw Powell run north toward Parker Street and the defendant run after him. The defendant told Powell to stop or he would shoot. Powell kept on running. The defendant shot him and he fell in front of the American Legion hall on Parker Street. The defendant walked toward Powell and said: "I told you to stop," and then ran up Parker Street. That was after the second shot. She testified that she saw the defendant raise his gun and shoot Powell in the face. Powell grabbed his face. They were 2 or 3 feet apart at that time.

While there is testimony of other witnesses with reference to certain facts regarding the shooting, we deem it unnecessary to summarize such evidence. Suffice it is to say that the evidence is sufficient to warrant submission of the case to the jury on the charges contained in the information against the defendant.

The defendant assigns as error that the trial court erred in denying the defendant the right to introduce evidence in support of his challenge to the array, or objections to the jury panel which was to try him; that by doing so, the trial court denied the defendant his statutory and constitutional rights guaranteed to him under Article I, section 11, of Constitution of the State of Nebraska, and under Article XIV, section 1, of the Amendments to the Constitution of the United States.

Taking up this assignment of error, the defendant argues that if the clerk of the district court and the jury commissioner had been permitted to testify, this testimony would have revealed that there were not 24 jurors for each judge hearing jury cases at the time this jury was to be impaneled; that the jury panel did not represent a fair cross-section of the people eligible for jury service in Douglas County; that there was left on the panel only a few employees of the packing houses whose wages were being paid partly by the State, the balance being made up by the employers; that the jurors remaining on the panel were for the most part housewives without the competence and experience to serve as jurors; and that the method of selection of the jury panel was such that no fair trial could be had by anyone by a cross-section of persons eligible for jury service.

In support of this assignment of error, the defendant cites section 25-1631.03, R. S. Supp., 1953, the effect of which is that there must be at least 24 petit jurors for each judge sitting with a jury.

The record shows the defendant's challenge to the array, the objections thereto being that of the panel of 200 jurors called for jury service at this jury term of

the district court, all but 55 were excused, and of the 55 remaining, one was a colored man. The great majority that were left were women, and a few employees of packing houses.

Section 25-1601, R. S. Supp., 1953, defines the qualifications of jurors. By an analysis of this section, we find nothing therein that disqualifies either a negro or a woman from jury service. Neither do we find any law which requires that a certain number of negroes or women shall be available for jury service or shall be included on the panel. Neither do we find constitutional or statutory requirements that a jury shall be composed of both whites and negroes in certain proportions, or that they shall be both male and female in certain proportions. The above assignment of error is without merit.

The defendant predicates error on the refusal of the court to give certain tendered instructions and, in addition, predicates error on each and every instruction given by the trial court on its own motion to the jury.

With reference to the instructions tendered by the defendant, instruction No. 1 reads as follows: "You are further instructed that if the complaining witness, Jessie Powell, maliciously attempted to shoot either the defendant, Johnnie Bell, or any other person, such an attempt would be a felony and Johnnie Bell, or any other private person, would have a right to arrest, without a warrant, Jessie Powell."

Requested instruction No. 3 deals with the same proposition, that is, a civil arrest under section 29-402, R. R. S. 1943, which provides as follows: "Any person not an officer may, without warrant, arrest any person, if a petit larceny or a felony has been committed, and there is reasonable ground to believe the person arrested guilty of such offense, and may detain him until a legal warrant can be obtained."

There is not the slightest evidence in the record that the defendant was attempting to arrest Powell or even

remotely had in mind to arrest him. He testified that he was mad because Powell had put a pistol on him. At the time of the shooting, the defendant had passed Powell. Powell was then going down the street apparently in a lawful manner, making no trouble at that time for anyone. The above tendered instructions were properly refused.

Requested instruction No. 2, by the defendant, reads as follows: "You are further instructed that a person has a right to defend himself if attacked, or if he has reasonable grounds to believe that he is about to be attacked, and to use such force and such weapons as are necessary to repel the assault, and if Jessie Powell had threatened to shoot and kill the defendant, and Jessie Powell had a gun, or that the defendant had reasonable grounds to believe that Jessie Powell had a gun, then the defendant, Johnnie Bell, would be justified in shooting Jessie Powell upon sight."

With reference to the requested instruction on self defense above set out, a man has no legal right to shoot another on sight merely because he suspects that the other man carries a gun, even though the other man may at some time have threatened to shoot and kill him. The defendant testified that when he returned from his home with his shotgun, he passed Powell on Parker Street going south. The defendant looked back and saw that it was Powell. He stopped his car, got out of it carrying his shotgun, and called to Powell to stop. When he saw Powell start to pull out a pistol, the defendant fired his shotgun at Powell. Under the facts above stated, manifestly the instruction tendered by the defendant on self defense is erroneous and was properly refused. It contained an inaccurate and incorrect statement of the law governing self defense. It had no application to the facts adduced at this trial. However, the court did properly instruct the jury on self defense, which instruction need not be set out in this opinion.

We have examined the other requested instructions

tendered by the defendant, all of which either contain an incorrect statement of the law as applied to the facts in the instant case, or are covered by instructions given by the trial court, and need not be discussed.

"To render the failure to give an instruction prejudicially erroneous, it is not sufficient that correct abstract propositions of law are therein embodied, but in addition it is requisite that such propositions be applicable to facts, at least in some degree, inferable from the evidence." Wells v. State, 47 Neb. 74, 66 N. W. 29.

An instruction which submits an issue to the jury not supported by the evidence is erroneous and should be refused. See City of South Omaha v. Wrzesinski, 66 Neb. 790, 92 N. W. 1045.

"An instruction which, in addition to a correct statement of the law, contains an assumption of the existence of a material fact upon which there was no evidence offered or received, and directs the attention of the jury to, and unduly emphasizes a part of, the evidence, should be refused." City of South Omaha v. Wrzesinski, *supra.*

It is not error for the trial court to refuse to give requested instructions which have no application or relevancy to the evidence adduced in the case, which are not supported by evidence, or which erroneously state the applicable principles of law, or where, in the light of all the instructions given, their refusal was not prejudicial to the defendant. See Trebelhorn v. Bartlett, 154 Neb. 113, 47 N. W. 2d 374.

Instructions to a jury must be considered together so that they may be properly understood, and, if as a whole they fairly state the law applicable to the evidence when so construed, error cannot be predicated on the giving thereof. See Peake v. Omaha Cold Storage Co., 158 Neb. 676, 64 N. W. 2d 470.

The defendant predicates error on the trial court's instruction No. 14 given on the court's own motion, which reads as follows: "There is evidence in this case that the defendant made certain statements to police

officers and a Deputy County Attorney shortly after his arrest.

"You are instructed that under the law you must not consider such statements as evidence in this case unless you first find that the State has proved, beyond a reasonable doubt, such statements were freely and voluntarily given by the defendant and not given as the result of force, threats or fear.

"If you find that the State has proved, beyond a reasonable doubt, that such statements were made by the defendant freely and voluntarily and not made as the result of force, threats or fear, then you may consider such statements as evidence along with the other direct and circumstantial evidence in this case.

"There is also evidence in this case that the defendant answered various questions at the preliminary hearing. This testimony was admitted because it may, or may not, affect the credibility of the testimony of the defendant.

"You are instructed that it is for you to determine from all the testimony, facts and circumstances shown, as to whether or not the statements made to the police officers and Deputy County Attorney, and the various answers to questions at the defendant's preliminary hearing, or the testimony given here, or either, are true."

The defendant predicates error on the part of the instruction above set out as follows: "There is also evidence in this case that the defendant answered various questions at the preliminary hearing. This testimony was admitted because it may, or may not, affect the credibility of the testimony of the defendant." Apparently it is the defendant's contention that this part of the instruction would tend to mislead the jury to believe that the defendant had testified falsely in the trial, and that his testimony was not worthy of credence. The defendant did make certain statements to the deputy county attorney which were made a part of the evidence in this case, but did not testify at the preliminary hearing. It

is not contended by the defendant that the instruction did not state the law correctly or that it was not applicable to the evidence presented. The objection made by the defendant is that the court inadvertently stated that questions were asked and answered at the preliminary hearing by the defendant.

Section 29-2308, R. R. S. 1943, provides in part: "No judgment shall be set aside, or new trial granted, or judgment rendered in any criminal case, on the grounds of misdirection of the jury, * * * if the Supreme Court, after an examination of the entire cause, shall consider that no substantial miscarriage of justice has actually occurred."

It is not pointed out by the defendant's counsel in what manner the error of the court prejudiced the rights of the defendant. We conclude that the error is not of such a nature that prejudice may be presumed, and is such an error as comes within the provisions of section 29-2308, R. R. S. 1943, and does not justify a reversal of the case. See, Bassinger v. State, 142 Neb. 93, 5 N. W. 2d 222; Lorimer v. State, 127 Neb. 758, 257 N. W. 217; Crawford v. State, 116 Neb. 125, 216 N. W. 294.

"Misdirection of a jury not causing a substantial miscarriage of justice does not require that a judgment shall be set aside." Lorimer v. State, *supra.*

The defendant predicates error on the fact that three forms of verdict were given to the jury by the trial court, one of which was returned finding the defendant guilty. The other two forms were unaccounted for. The contention of the defendant was to the effect that the two forms not used by the jury should have been returned to the court. We find no law or rule of court which requires the jury to preserve the unused forms of verdict, and we are cited to none by the defendant. The assignment of error is without merit.

It is next contended by the defendant that the sentence in this case is excessive. The defendant was sen-

tenced to 4 years at hard labor in the State Penitentiary. Section 28-413, R. R. S. 1943, fixes the penalty for the crime of which defendant was convicted at imprisonment for not less than 1 year nor more than 5 years. The penalty imposed by the trial court was not the maximum penalty, and it must be presumed the trial court fixed the term of imprisonment after consideration of the case and in the exercise of judicial discretion. Section 29-2308, R. R. S. 1943, which authorizes the Supreme Court to reduce a sentence when in its opinion the sentence is excessive, was not intended by the Legislature as a directive to the court to reduce the sentence in every instance where it is asked, but only in those cases where it is apparent that the trial court has abused its judicial discretion and fixed a penalty which is clearly excessive. Under the facts in the instant case, the penalty imposed by the trial court was not clearly excessive, and the trial court did not abuse its judicial discretion in entering such sentence. The assignment of error is without merit.

There are other assignments of error which have been examined and are without merit and need not be discussed in this opinion.

For the reasons given herein, the verdict and judgment entered thereon are affirmed.

AFFIRMED.

WILLIAM V. RODGERS, APPELLANT, V. EDWARD C. F. JORGENSEN ET AL., APPELLEES.

67 N. W. 2d 770

Filed December 28, 1954. No. 33556.

1. **Contracts: Pleading.** An action on a quantum meruit may be joined in a petition with an action on an express contract, and a judgment based on either will satisfy the liability as to both claims where they have their origin in the same transaction.
2. **Equity.** A prayer for general relief in an equity action is as broad as the pleadings and the equitable powers of the court.

3. **Pleading: Evidence.** A party may at any and all times invoke the language of his opponent's pleading, on which a case is being tried, on a particular issue, and in doing this he is neither required nor allowed to offer such pleading in evidence in the ordinary manner.

APPEAL from the district court for Douglas County: JAMES M. PATTON, JUDGE. *Reversed and remanded with directions.*

Hammes & Hammes, for appellant.

L. B. McDonald, Young, Williams & Holm, and *Edmund D. McEachen,* for appellees.

Heard before SIMMONS, C. J., CARTER, MESSMORE, YEAGER, CHAPPELL, WENKE, and BOSLAUGH, JJ.

WENKE, J.

This is an action instituted in the district court for Douglas County by William V. Rodgers for the purpose of foreclosing a mechanic's lien on the home property of Edward C. F. and Cora C. Jorgensen, husband and wife, located at 5818 Florence Boulevard, in Omaha, Nebraska. The trial court found the Jorgensens were not indebted to the plaintiff and, because thereof, dismissed the petition. Plaintiff filed a motion for new trial and, from the overruling thereof, perfected this appeal.

The Rivett Lumber & Coal Company, also referred to as the Rivett Lumber Company, admittedly, at the request of appellant, furnished most of the materials that were used in repairing and remodeling the Jorgensens' home. There was a balance due on this account. The company filed a mechanic's lien on the Jorgensens' property for this balance and made a claim in this proceeding therefor, including a charge of $4.50 paid for filing its lien. The trial court found there was due on this claim the sum of $771.92. There is no dispute as to this amount, which the Jorgensens have paid. We shall, for convenience, hereinafter refer to the Jorgensens as appellees.

The appellees' home was apparently completely remodeled and extensively repaired by appellant, who furnished all labor and materials for that purpose. In regard thereto appellant alleged: "* * * for which repairing and remodeling plaintiff agreed to furnish all materials and necessary labor at a total cost to him, plus a 10% profit making no additional profit on his own labor for which he was to receive his regular wages."

In this regard appellees alleged they: "* * * employed Plaintiff by oral contract to repair and remodel defendants' home on the above described property; to furnish all labor and all materials in the repairing and remodeling of said premises for the agreed price of $2000.00 and to have said repairs and remodeling completed within three weeks from said date."

Appellant suggests that since we have held mechanic's lien statutes should be liberally construed so as to effectuate their objects and purposes, and thus protect claimants thereunder, that we should here permit appellant to recover the fair and reasonable value of the labor and materials he furnished and supplied in remodeling and repairing appellees' home. He states this in his brief as follows: "If, on a trial de novo, this Court should find that the evidence does not establish any clear and convincing express contract between the parties as to a compensation agreed upon but rather establishes that the minds of the parties never expressly met as to the specific compensation to be paid, then we submit that the law would imply a contract for the reasonable value of all labor and materials which Rodgers furnished that went into the improving, remodeling and repairing of the Jorgensen house."

Such right to recover would be on quantum meruit and based upon an implied promise to pay the reasonable value of the labor and materials furnished. See Umberger v. Sankey, 154 Neb. 881, 50 N. W. 2d 346.

It is true that: "An action on a quantum meruit may be joined in a petition with an action on an express

contract, and a verdict and judgment will satisfy the liability as to both claims where they have their origin in the same transaction." Stout v. Omaha, L. & B. Ry. Co., 97 Neb. 816, 151 N. W. 295. See, also, Umberger v. Sankey, *supra.*

In this regard we said in Umberger v. Sankey, *supra:* "In the case before us the law implies a promise to pay when the materials and labor were requested. It was not necessary to plead the promise to pay which the law implies. The pleading of such a promise was therefore not essential and was, at most, harmless. It added nothing but a fiction to the pleading and can afford no basis for a claim of a fatal variance between the pleading and proof."

And, "A prayer for general relief in an equity action is as broad as the pleadings and the equitable powers of the court." Gibson v. Koutsky-Brennan-Vana Co., 143 Neb. 326, 9 N. W. 2d 298. See, also, Halligan v. Elander, 147 Neb. 709, 25 N. W. 2d 13.

However, "A party may at any and all times invoke the language of his opponent's pleading, on which a case is being tried, on a particular issue, and in doing this he is neither required nor allowed to offer such pleading in evidence in the ordinary manner." Gibson v. Koutsky-Brennan-Vana Co., *supra.*

As stated in Bonacci v. Cerra, 134 Neb. 476, 279 N. W. 173, quoting from 2 Wigmore, Evidence (2d ed.), § 1064, p. 536: " 'The pleadings in a cause are, for the purposes of use in that suit, not mere ordinary admissions, * * * but judicial admissions * * * i. e., they are not a means of evidence, but a waiver of all controversy (so far as the opponent may desire to take advantage of them) and therefore a limitation of the issues. Neither party may dispute beyond these limits. Thus, any reference that may be made to them, where the one party desires to avail himself of the other's pleading, is not a process of using evidence, but an invocation of the right to confine the issues * * *.' "

By his pleadings we find appellant here limited his right to recover to the oral contract pleaded, which appellees have denied, and thereby placed upon himself the burden of proof to establish such contract.

On appeal we shall consider the record de novo. The principle applicable is stated in York Brick & Tile Co. v. Ude Motor Co., 123 Neb. 154, 242 N. W. 361, as follows: " 'In all appeals from the district court to the supreme court in suits in equity, wherein review of some or all of the findings of fact of the district court is asked by the appellant, it shall be the duty of the supreme court to retry the issue or issues of fact involved in the finding or findings of fact complained of on the evidence preserved in the bill of exceptions, and upon trial de novo of such question or questions of fact, reach an independent conclusion as to what finding or findings are required under the pleadings and all the evidence, without reference to the conclusion reached in the district court or the fact that there may be some evidence in support thereof.' Comp. St. 1929, sec. 20-1925."

However, as stated in O'Brien v. Fricke, 148 Neb. 369, 27 N. W. 2d 403: "Actions in equity, on appeal to this court, are triable de novo in conformity with section 25-1925, R. S. 1943, subject, however, to the condition that when the evidence on material questions of fact is in irreconcilable conflict this court will, in determining the weight of the evidence, consider the fact that the trial court observed the witnesses and their manner of testifying and must have accepted one version of the facts rather than the opposite." See, also, Rettinger v. Pierpont, 145 Neb. 161, 15 N. W. 2d 393.

The evidence shows that on three different occasions in the latter part of July or the first few days of August 1952 appellant talked with the appellees, or one of them, about the remodeling and repairing of their home. These conversations took place at the appellees' home. Appellant testified that on the second of these visits Jorgensen told him to go ahead with some cement work

which appellant had told him he would do for $72. This work was completed. While doing this work appellant testified a third conversation was had. This conversation he testified related to other repairing and remodeling, particularly about leveling the house and putting a support beam in the basement. Appellant testified he told Jorgensen, " '* * * I don't give a set price on work for remodeling. Our work is cost plus ten per cent profit on labor and materials, and I furnish the tools and bring the equipment and there is no extra charge on my labor.' " That Jorgensen then replied, " 'Go ahead.' " Appellant testified that thereafter all materials were furnished and work was performed on appellees' home pursuant to this arrangement and that he never gave or agreed to any fixed price therefor. The bill he submitted to Jorgensen on November 3, 1952, after all of the work had been completed on November 1, 1952, was on this basis. Thereafter, on November 11, 1952, appellant went back to the appellees' home and fixed whatever appellees had objected to as unsatisfactory. On November 19, 1952, Jorgensen paid appellant $500, this payment making a total of $2,000 that has been paid.

On the other hand Jorgensen testified the matter of what was to be done in the way of remodeling and repairing the home was fully and specifically discussed with appellant on two different occasions; that appellant, after carefully checking what was needed in the way of labor and materials to do this remodeling and repairing made a bid of from $1,950 to $2,000 to fully perform it, appellant to furnish all the labor and material needed for that purpose; that he accepted the bid; that appellant did the remodeling and made the repairs; and that he has paid appellant the $2,000. Mrs. Jorgensen testified to the same agreement. Appellant denies having made any such agreement.

We think there are many discrepancies and inconsistencies in the testimony of the appellees that cast

serious doubt as to the correctness thereof. We shall set out a few.

A steel beam was used in the basement in connection with leveling the house. Appellant told Jorgensen that the beam would cost him $80. Jorgensen inferred the price was too high, that he thought he could get it cheaper. This he did, paying $45. Jorgensen admits that under his theory of the agreement it was appellant's responsibility to furnish the beam and pay for it, yet he never asked appellant to refund the purchase price nor did he deduct it from any payments he made to appellant. He finally stated: "* * * could you blame me if I got it cheaper?" It is a little difficult to understand this action of Jorgensen, and his reasons therefor, except that the agreement was as appellant testified.

Jorgensen testified the first time appellant came out to the house he came out with a man by the name of Ernie and that appellant and Ernie made a check of what was to be done but no agreement was discussed at that time; that the second time appellant came out he came out by himself to make a recheck but no agreement was made at that time; and that the third time appellant came out Simonds came with him and was present when they talked price and entered into the agreement. Later in his testimony Jorgensen testified that although Simonds was there on the occasion of the agreement being made no discussion of price was had in his presence. Mrs. Jorgensen testified to these three occasions when appellant came out but said the contract was entered into prior to the time Simonds came out with appellant. David Franklin Simonds, the party referred to and the carpenter who helped appellant on the job, denies being present on this occasion and testified he was never at the appellees' home before August 11, 1952, which was over a week after appellant actually started to do the work.

It is also significant that in the first instance the Jorgensens, in attempting to state all that was to be included

in the contract, failed to include such items as the work done on the garage and the insulation in connection with lowering the ceilings.

It is also significant, if a definite contract price was to be agreed to, that no written plans or specifications of the work to be done and materials needed were ever drawn up since the job involved a very substantial amount of remodeling and repairing of a large two-story frame house. The work included remodeling and repairing the boy's bedroom, front entrance, living room, dining room, master bedroom, bathroom, kitchen, pantry, and rear entrance on the first floor; same to the apartment on the second floor; repairs in the basement, including the leveling of the house; cement work outside; and repairs to the garage.

It is apparent that the work that was to be done was determined from day to day; that the material bill indicates material was ordered and delivered on that basis; and that after the work planned was begun the appellees, particularly Mrs. Jorgensen, from time to time added thereto and made changes therein.

We think the evidence shows, as Mrs. Jorgensen stated, that they had appellant come out to their home to make an estimate of what it might cost them to have their home remodeled and repaired. This is supported by Jorgensen's testimony that appellant said the labor and material to complete the job would cost between $1,950 and $2,000; that is, $2,000 or less.

The record is filled with testimony of the appellees that they were dissatisfied with the work and told appellant of that fact. In this regard the record shows that after the work was completed on November 1, 1952, and appellant had, on November 3, 1952, presented his bill for $4,000.37, appellant and Simonds went out to the house on November 11, 1952, and made some adjustments. No claim for damages was made by appellees in their answer and cross-petition nor did they attempt to show they were damaged thereby.

We find appellant furnished the labor and material for the job pursuant to the contract he alleged, presented his bill to appellees on that basis, filed his lien based thereon, and is entitled to recover accordingly.

In addition to the cement work, which he agreed to do for $72, and his own services, appellant furnished $1,185.60 of labor and $1,409.57 of material. On these two items he is entitled to 10 percent or $259.52. His own labor was $1,041.95. He paid a fee of $2.25 for filing his mechanic's lien. This is a total of $3,970.89. Of this amount appellees have paid appellant $2,000. They are also entitled to have a credit thereon for the lien of the Rivett Lumber Company, which they paid, leaving a balance owing of $1,198.47. This amount appellant is entitled to recover from appellees with interest at 6 percent from May 11, 1953, and all costs of this litigation. Appellant should be given a lien on appellees' property therefor with direction that if it is not paid within the time fixed by the court that a foreclosure thereof be had by a sale of the property.

In view of the foregoing we reverse the judgment of the trial court and remand the cause with directions to enter a decree in accordance herewith.

REVERSED AND REMANDED WITH DIRECTIONS.

CLARENCE MYERS, APPELLEE, V. PLATTE VALLEY PUBLIC POWER AND IRRIGATION DISTRICT, A PUBLIC CORPORATION, APPELLANT.

67 N. W. 2d 739

Filed December 28, 1954. No. 33587.

1. **New Trial.** A new trial is to be granted for a legal cause and where it appears that a legal right has been invaded or denied. A new trial is not to be granted for arbitrary, vague, or fanciful reasons.
2. **Appeal and Error: Trial.** The Supreme Court is not vested with authority by the Constitution or laws of the state to set aside the verdict of a jury, having for its support sufficient compe-

tent evidence, even though this court may be of the opinion that had it been the trier of the case, it would have reached a different conclusion.

3. **Trial.** While the trial judge need not give his reason for reaching a decision, the justification of the decision must be one that can be established from the record.
4. ———. Where a party has sustained the burden and expense of a trial and has succeeded in securing the judgment of a jury on the facts in issue, he has a right to keep the benefit of that verdict unless there is prejudicial error in the proceedings by which it was secured.
5. **Trial: Appeal and Error.** Instructions not complained of in such a way as to be reviewable in this court will be taken as the law of the case, and if, when tested by such instructions, the verdict is not vulnerable to the objections lodged against it, the assignments will not be sustained.
6. **Trial.** It is presumed that a jury followed the instructions given in arriving at its verdict and, unless it affirmatively appears to the contrary, it cannot be said that such instructions were disregarded.
7. **Trial: Appeal and Error.** Where there is no proper or adequate showing that the verdict of a jury resulted through passion, bias, or prejudice the verdict of the jury will not be disturbed on appeal.
8. ———: ———. When the evidence is conflicting, the verdict of the jury will not be set aside unless it is clearly wrong.

APPEAL from the district court for Keith County: ISAAC J. NISLEY, JUDGE. *Reversed and remanded with directions.*

Crosby & Crosby and *Jess C. Nielsen,* for appellant.

Edward E. Carr and *W. I. Tillinghast,* for appellee.

Heard before SIMMONS, C. J., CARTER, MESSMORE, YEAGER, CHAPPELL, WENKE, and BOSLAUGH, JJ.

MESSMORE, J.

The plaintiff brought this action at law in the district court for Keith County to recover damages alleged to have been sustained by the plaintiff caused by seepage water escaping from defendant's canal reaching the plaintiff's land and destroying 12½ acres of wheat during

the 1948 crop year, and for continuing damages until the expiration of the school land lease held by the plaintiff which expires in 1959. The defendant filed a written offer prior to the time of trial to confess judgment in the amount of $2,500, which offer was refused and the cause proceeded to trial. The jury returned a verdict in favor of the plaintiff and against the defendant, fixing the amount of plaintiff's recovery in the sum of $1,100. The plaintiff filed a motion for new trial which was sustained by the trial court. From the order of the trial court sustaining the plaintiff's motion for new trial, the defendant perfected appeal to this court.

For convenience we will refer to the parties as they were designated in the district court.

That the defendant, Platte Valley Public Power and Irrigation District, is a public power and irrigation district organized and existing under and by virtue of the laws of the State of Nebraska, and particularly under the provisions of sections 70-601 to 70-679, R. R. S. 1943, is admitted.

The record shows that the plaintiff was the owner of a school land lease on the south half of the southwest quarter, and Lots 2 and 3 in Section 8, Township 13, Range 35 West of the 6th P. M., being the lease with the Department of Public Lands and Buildings, No. 653398, which expires January 1, 1959.

The plaintiff's second amended petition, insofar as the same need be considered here, alleged in substance that during 1947, the defendant constructed a canal across the south edge of the above-described real estate, taking part of said land for construction purposes, and during the rainy seasons has been transferring water from the South Platte River through defendant's canal to the place known as the Sutherland reservoir, one of the reservoirs south of Sutherland, in which water for the defendant is stored for the purpose of sealing the banks of said canals and reservoirs; that the canal above referred to was constructed by the defendant upon its right-of-way

which was acquired for public use, and that it has maintained, used, and operated the canal in the transferring of water and silt for its use, and in doing so, permitted, during high-water periods, the water to seep out of the canal and damage the crops of the plaintiff; that during June and July 1948, the water seeped out of the canal upon 12½ acres of wheat planted by the plaintiff and destroyed the crop; that the land of the plaintiff had been summer fallowed, and the average wheat grown upon the land and the lands adjoining was 25 bushels to the acre and the same sold for $1.98 a bushel; and that during the year 1948, the plaintiff was damaged in the amount of $618.75. The plaintiff alleged continuing damages for the remainder of the term of the lease in the amount of $5,000.

The defendant's answer denied the allegations of the plaintiff's petition relating to negligence on its part; affirmatively alleged that the area of plaintiff's land as alleged to be overflowed and water logged is low-lying first river bottom land of native hay meadow type and not adaptable to successful cultivation, and is subject to natural seepage and flooding during wet seasons of the year; alleged that any damages claimed to have been sustained by the plaintiff are the result of natural causes; specifically denied the same resulted from the construction, operation, and maintenance of the defendant's diversion canal; and prayed that the plaintiff's petition be dismissed.

The plaintiff's reply to the answer of the defendant was a general denial of the material allegations contained therein save and except such as were admitted in the plaintiff's second amended petition.

The plaintiff testified that he and his son, Lewis Myers, have farmed the land described in the lease since 1943. This land comprises about 20 acres of hay meadow, 40 acres of pasture land, and the rest under cultivation, except for 5 acres used as a cemetery. He first noticed coarseness in the hay in 1948. There were

approximately 179 acres in the lease. Some 20 acres had been taken by the defendant for its right-of-way across the south portion of the leased land when the canal was built in 1946. Approximately 14 acres lie to the south of the defendant's right-of-way. The plaintiff first noticed damage to his cultivated land in 1948 to a wheat crop seeded in 1947. He had difficulty with his machinery; it would mire down on a small tract which measured 12½ acres which he could not harvest in 1948. There was no difference in the soil where the crop was destroyed and in the rest of the cultivated land, and he had never before noticed seepage there. He did not harvest the 1948 crop. He has planted the land to crops since and has been unable to harvest it. The area where the seepage occurred has been getting larger. In 1948, the wheat averaged around 30 to 31 bushels an acre, and on the open market was worth $1.98 to $2 a bushel. Following 1948, the hay grew coarse and brought from $12 to $15 a ton, while good hay brought $30 a ton. He had noticed no difference in this respect prior to 1948. He testified that in his opinion the school land lease in 1948 was of the value of $9,000, or $65 an acre, and that the value of the lease in 1948, assuming the damage which he now knows to exist on the land had existed at that time, was in the amount of $4,000.

On cross-examination the plaintiff testified that there was a marked swale running east and west, meandering through his hay meadow just north of his cultivated land; that there was drainage from the hills to the south running in a northerly direction toward the river and onto his meadow land; and that following heavy rains there was a surface runoff that went down into the low places, but it did not stand any length of time. He sold his 1948 hay crop, except certain portions which he fed. He summer fallowed the 12½ acre tract in 1949, and each second year thereafter. He had never seen alkali on his land until the defendant's ditch was

constructed. He was cognizant that the Board of Educational Lands and Funds could have reappraised his land from time to time for the purpose of establishing lease rental, and that he paid a rental of 6 percent upon the appraised value, payable semiannually. He further testified that it costs from $2.50 to $3 an acre to harvest wheat, and it cost him as much to harvest his wheat with the 12½ acres out as though he had harvested his entire acreage, due to the fact that it is easier to farm straight across than to go around the 12½ acres.

The plaintiff's son testified that the 12½ acre tract was summer fallowed and cropped in 1950 and 1952. He testified that he had difficulty in harvesting; that it would be easier to work straight through the strip than to work around it; that the north line of the farm land is practically straight east and west; that a road runs along the hay meadow; and that the farm land slopes up to the south. In his opinion, the school land lease was worth around $10,000 in 1948, that was before there was any wet land on it, and, from his knowledge of the land, he testified that in his opinion it was worth, at the time of trial, $3,500. On cross-examination he testified that the 1948 yield of wheat on this land was 1,968 bushels; the 1950 yield was 1,988 bushels; and the 1952 yield was 2,606 bushels. In 1950, they had the heaviest yield of hay on the meadow, in tonnage, that they had ever had. This was due to a wet year. He also testified that there was a drainage area across the farm land from the south to the north, but water hardly ever stayed on this land, as it progressed down the slough or swale north of the cultivated land. He had never known of alkali spots along this swale until 1948. The village of Paxton purchased 5 or 6 acres for cemetery purposes, which he and his father farmed as a part of their tract.

A witness for the plaintiff testified that he had put up hay on the land in question in 1945, and every year

since until 1951. From 1948 to 1951, the hay was heavier where the land was wet and soggy. He observed that a portion of the wheat crop in 1948 was not cut, but there were weeds in that area. From his knowledge of the wet hay meadow and assuming that the 12½ acres of wheat land were not harvested, in his opinion the value of the lease would be depreciated to 45 percent of what it was before. This depreciation was largely due to the fact that the hay meadow became wet and water logged.

A witness testified to the yield on his wheat land located approximately a mile to the west and being similar in character to the land in question, and that he obtained 25 to 40 bushels per acre on his land. He was acquainted with the land the plaintiff farmed, and up to 1948 it was all farmed. In that year there was a small patch toward the north of the cultivated tract that did not look too good, and this condition has existed in that place since. He had never known of alkali on this land until 1948, but there was alkali about a mile west on the Stafford land or the Pielstick land. He further testified that the original name of Paxton, Nebraska, was Alkali, due to the alkali lands surrounding Paxton.

Another witness, acquainted with the land in question and who had farmed for a number of years west of such tract, testified that the land in question had been farmed to wheat ever since he had known it, and that there always was a spot along the north side that was not harvested. He had observed this condition since the ditch was put in. He further testified that, assuming that there had never been any damage on the land prior to 1948, the same at that time would have been worth from $60 to $70 an acre; and assuming that the 12½ to 14 acres had been damaged by water logging from 1948 to the date of termination of the lease, in his opinion the reasonable value of the lease following such damage as alleged would be around $4,000. On cross-examination this witness testified that he did not know that in 1938 the small area of cultivated land com-

plained of in this action was not harvested, and that later, in 1940 and 1941, the same area could not be harvested due to the wet condition.

A witness residing 5 miles south of Grant, Nebraska, who had previously lived in Keith County half a mile west of Paxton, testified that he had put up hay on the land in question from 1949 to 1951, and observed that the hay was getting more rank and coarse during this period of time.

Another witness who lived south of Madrid, Nebraska, testified that in 1944 he lived south of Paxton, was acquainted with the land in question, and put up the hay in 1944. This witness harvested the 20 acres of meadow and obtained approximately 30 tons of good quality hay. The wheat crop on the cultivated land was all harvested that year. On cross-examination this witness testified that he recalled a swale or slough; that it did not run up to the wheat lands, but was back a ways; that he could drive along the road south of the meadow lands; and that he had never noted any marked erosion from the surface runoff waters through what is now the plaintiff's cultivated area.

Another witness who resided 10 miles south of Paxton testified that he had been acquainted with the land in question for from 20 to 50 years; that his wife owned land 1½ to 2 miles west of plaintiff's land; that he had noticed a portion of the land in question that did not produce a crop prior to 1948; and that he observed a hay crop on his hay meadow land to the west which had been harvested each year and the greater part of the hay had appeared to grow more coarse since 1948 or 1949.

A witness who had known the tract of land in question for about 8 years and had put up hay on it in 1942, when it was being farmed by a different person, testified that the hay was of good quality only that the sweet clover was a little too big. He had harvested about 20 acres of the meadow and it measured 34 tons.

The tenant at that time had oats in the cultivated area adjoining the hay meadow to the south, and he cut all of the oats. He had no occasion to observe this land since 1942. He did purchase a load of hay from the plaintiff in 1949, and it appeared to be somewhat coarser. In his opinion the lands of this school land lease were worth in 1948, before there was any damage apparent from the water, about $60 an acre. He had no knowledge of the condition of the land subsequent thereto.

The defendant offered the testimony of a state land appraiser for the Board of Educational Lands and Funds who identified the school land lease in question. He was acquainted with the land by previous examination, and had known the same since 1942 when he first inspected the land. Later an inspection had been made by Mr. Dillon, and in 1951 the land was again inspected by this witness. He explained how the appraisal was made by an examiner and how the land was classified and the values arrived at on the inspection and the classification over a period of 10 years, and that reappraisals are had for the purpose of establishing rental on the land. In re-appraising, sometimes the classification of the land is changed, either the same is raised or lowered for lease purposes, but this fact does not establish market value. He testified that the semi-annual rent on the land in question was $111.75, based on 6 percent of the reappraised valuation as placed upon this property by the records in his office, which valuation was subject to change. He further testified that the type of soil generally was a sandy loam, but in the very low spot which comprised approximately 12 acres, he was not sure that it was sandy loam, but was inclined to think that it was underlaid with a clay subsoil which might form a hard pan. He further testified that he was certain that at least a portion of the seepage water came from the canal because there were traces of it showing down through the field which indicated that there was a seepage coming from that source, and that

there was approximately 12 acres where the seepage occurred. In 1942 he did not notice any seepage, but he was certain that there was one place in 1951 where he had noticed seepage.

The office manager for the defendant, who had been employed by the district since 1934, testified as to the construction of the South Platte diversion canal in 1945 and 1946; that the first water run into the canal was in November 1946; and that the South Platte River carried a lot of silt and clay in its water and the canal was built primarily for the purpose of bringing this silt-bearing water into the system to seal its canals and reservoirs and for the purpose of preventing loss from seepage. He had been acquainted with the tract of land in question since 1935, and in connection with engineering work for the district had obtained aerial photographs of all lands through which the district's canals run and of the reservoirs from Lake McConaughy to Kearney. He testified with reference to the aerial maps. All of this testimony was in detail with the use of exhibits, and gave the jury a comprehensive picture of the land in question. We deem it unnecessary to relate this testimony in this opinion.

A witness living in Paxton who had lived 2 miles south and 1½ miles west of Paxton, employed by the village of Paxton through the cemetery board and who was in charge of digging graves and caring for funerals since 1945, described the manner in which he dug the graves, the depth of the same, and testified that he had never encountered any soil condition which would indicate seepage. He was acquainted with the land in question, and had cut oats on the cultivated land in 1932 and 1934. He further testified that part of the land north of the cemetery along the north portion of the cultivated land was "wet and miry," and he was unable to harvest it.

A resident of the Paxton vicinity since 1911 testified that he had been acquainted with the land in question during all of those years. In describing this land he tes-

tified that the low land on the tract in question was subject to alkali, and that he did not observe any particular difference in this land in its productivity during the years prior to and following 1948. Some years the crop was good and some years poor. He further testified that he had observed, during the years, 12 to 15 acres toward the north edge of the tract that became soggy and water logged; that this area had been of a similar condition during the years; and that he had noticed no particular difference in recent years.

A witness who had known the land in question for 45 years, had been an owner of land in the county for 43 years, and had rented land along the North Platte River, testified that he had been over the tract of land in question recently and there was quite a little alkali on the bottom land. He had observed the hay meadow and the cultivated area, and testified that along the north portion of the cultivated land, when they have heavy rains in the spring, the alkali shows up and it is not possible to raise a crop. In the event there is a dry spring, a good crop may be raised. In wet seasons, since he has known the land, portions of the low land were water logged. In recent years some of the cultivated land, he noticed, was not harvested. This was true also in the earlier years along the north side and next to the bottom land. He had observed the swale across the land and the low places on the farm land, and in wet years these areas turned white. Alkali came to the top and turned the land white both on the meadow and on the farm land. This would generally show up early in the spring and summer, depending upon the rainfall.

The superintendent of the hydraulic department of the defendant district since 1941 testified that he worked on a survey crew for the district in 1934, and in this capacity had been over the cultivated area in this tract of land. In 1934 there was an area located from 100 to 200 feet west of the state highway and down near the meadow land that was not harvested. He ran the initial

survey for the defendant, and observed this tract of land at that time. About two-thirds of the way toward the west there was a draw that they had to go around. Since the ditch was constructed, the swales coming from the south through the fields have disappeared and they are farmed over, the surface floodwaters having been cut off by the canal. He was over the land in 1942 surveying, and the alkali was predominant on the surface of the ground along the low-lying areas. He knew that portions of the lower land were not harvested, and this occurred almost every year.

A witness who had lived in Lincoln County near North Platte for a period of over 53 years on lands along the South Platte River and who owns land adjoining the river, testified that he had been employed by the defendant since 1934 as a geologist and had supervised borings for the footings and structures of the canal excavation. He had made borings throughout the area and through damaged areas for the purpose of constructing drain ditches. He had known the tract of land in question since 1934, and made a personal examination and investigation of the type of soil on this land. From his examination he found the upland soil to be a sandy loam and the lower area to be a silt loam. He also had made borings on the land some 200 or 300 feet north of the north line of the cemetery and had encountered a clay layer that was impervious to water generally. He had observed evidence of alkali salts over this land, especially along the north portion of the cultivated field. He had also observed the swale or slough running through this tract of land, and near the west end it turns to the north and enters the pasture land. This slough serves as a natural drainway for the runoff surface waters from the south. He did not observe any erosion that would inconvenience farming. He identified an exhibit which reflected surveys and measurements made in the area in question in this case. From that exhibit, for the year 1947, there is reflected an unhar-

vested acreage of 5.55 acres; the 1948 measurement reflects an unharvested acreage of 12.74 acres; for the year 1949, an unharvested acreage of 5.6 acres; for the year 1950, an unharvested area comprising 6 acres; for the year 1951, it reflects the entire cultivated area seeded to wheat and the tract of land involved as showing white alkali; for the year 1952, it reflects an unharvested acreage of 3.5 acres; for the year 1953, the entire cultivated area as summer fallowed; and on June 16, 1953, no evidence of wet land in the area involved. There is other evidence by this witness to the effect that he was acquainted with prairie and meadow grasses; that he had been over the meadow and pasture on the land in question several times; and that the grasses grown there were the western wheat grass, gramma grass, and blue stem, side oats and gramma grass predominate. He had examined the meadow recently and at the time of trial there was an extensive growth of gramma grass with seed flags on it. This grass seeds twice a year, in the spring and after the harvest the seeds come on again a second time. The same type of gramma grasses appear on the table lands. As to these native grasses, in an extremely dry year there is a lighter cutting but a finer quality of hay, and in wetter years a heavier growth of hay but of poorer quality.

Prior to the defendant resting its case, request was made that the jury be sent to the premises involved under proper instruction by the court for the purpose of assisting the jury in arriving at a determination of the issues. This request was granted and the jury viewed the premises in question.

The plaintiff, in his motion for new trial, did not take exceptions to the instructions given by the trial court. The motion for new trial set forth that the jury erred in the assessment of the amount of recovery, in that it was too small, the action being for injury to property and to property rights; that the jury disregarded the instructions of the trial court, and the verdict was the

result of bias and prejudice; and that the verdict was arrived at and influenced by and through personal favoritism of the jurors toward the defendant, in utter disregard of the law and the evidence presented, preventing the plaintiff from having a fair and impartial trial.

The defendant assigns as error the following: (1) That the court's ruling in setting aside the verdict of the jury and granting a new trial was not justified by the record. (2) That the court's ruling was an abuse of judicial discretion and not based upon or sustained by any legal principle applicable to the facts in this case. (3) That no exceptions in the motion for new trial had been taken to any of the instructions as given by the court and that by said instructions the disputed issues of fact were fairly submitted to the jury and resolved and determined by the jury in a manner favorable to the defendant, though said verdict was in favor of the plaintiff, and no error in the record being pointed out, the court's finding and order sustaining the motion and setting aside the verdict were an abuse of judicial discretion and an invasion of the province of the jury.

In this connection, the following authorities are pertinent to this appeal.

In Greenberg v. Fireman's Fund Ins. Co., 150 Neb. 695, 35 N. W. 2d 772, this court said: "A new trial is to be granted for a legal cause and where it appears that a legal right has been invaded or denied. A new trial is not to be granted for arbitrary, vague, or fanciful reasons. Tingley v. Dolby, (13 Neb. 371, 14 N. W. 146) supra; Missouri Pacific Ry. Co. v. Hays, 15 Neb. 224, 18 N. W. 51; Wagner v. Loup River Public Power District, ante p. 7, 33 N. W. 2d 300.

"The power of judicial discretion authorizes and requires the court to determine the question as to whether or not a legal reason exists for the granting of a new trial. If a legal reason exists and the complaining party makes his application in writing within the time fixed

by statute the court has no discretion in the matter and the motion must be sustained. If a legal reason does not exist the court has no discretion in the matter and the motion must be denied. Tingley v. Dolby, supra; Bradley v. Slater, 58 Neb. 554, 78 N. W. 1069."

The Supreme Court is not vested with authority by the Constitution or laws of the state to set aside the verdict of a jury, having for its support sufficient competent evidence, even though this court may be of the opinion that had it been the trier of the case, it would have reached a different conclusion. See Risse v. Gasch, 43 Neb. 287, 61 N. W. 616.

While the trial judge need not give his reason for reaching a decision, the justification of the decision must be one that can be established from the record. See Greenberg v. Fireman's Fund Ins. Co., *supra.*

"Where a party has sustained the burden and expense of a trial and has succeeded in securing the judgment of a jury on the facts in issue, he has a right to keep the benefit of that verdict unless there is prejudicial error in the proceedings by which it was secured." Greenberg v. Fireman's Fund Ins. Co., *supra.*

In the instant case no exceptions were taken to any instructions given by the trial court, and the plaintiff has made no attempt to point out in the motion for new trial any error in the giving of instructions by the trial court, and the same are not urged as being erroneous in this appeal.

The rule is that instructions not complained of in such a way as to be reviewable in this court will be taken as the law of the case, and if, when tested by such instructions, the verdict is not vulnerable to the objections lodged against it, the assignments will not be sustained. See, Skinner v. Wilson, 76 Neb. 445, 107 N. W. 771; Webber v. City of Scottsbluff, 150 Neb. 446, 35 N. W. 2d 110.

It is also the rule that it is presumed a jury followed the instructions given in arriving at its verdict and, unless it affirmatively appears to the contrary, it cannot

be said that such instructions were disregarded. See Missouri Pacific Ry. Co. v. Fox, 60 Neb. 531, 83 N. W. 744.

We have previously set forth certain items contained in the plaintiff's motion for new trial relating to the proposition that the verdict of the jury was returned through passion and prejudice and in violation of the substantial rights of the plaintiff. In this connection the plaintiff, by an affidavit appearing in the transcript, which does not appear in the bill of exceptions, showed the relationship of certain jurors to public power districts. This affiant was Melvin Allen who stated that in 1939, 1940, 1941, 1942, and 1943, he worked in the employ of different construction contractors in the construction of the Kingsley Dam; that Herbert Davison, one of the jurors, worked for and was in the employ of the Martin Wunderlich Company, one of the construction contractors on the dam; that S. A. Spoeneman, one of the jurors, was employed and worked in the capacity of guard at the dam for the Central Nebraska Public Power and Irrigation District; that Roy Peters, one of the jurors, was employed by and worked for the Central Nebraska Public Power and Irrigation District; and that Harry Suhr, one of the jurors, was employed by one of the construction companies working at the dam.

The amount of damages sustained by a landowner for a right-of-way condemned across his land is peculiarly of a local nature to be determined by a jury and this court will not ordinarily interfere with the verdict if it is based upon the testimony. When the evidence is conflicting, the verdict of the jury will not be set aside unless it is clearly wrong. The jurors are the judges of the credibility of witnesses and of the weight of their testimony. See Kennedy v. Department of Roads & Irrigation, 150 Neb. 727, 35 N. W. 2d 781. We find the assignment of error that the verdict was rendered through bias, passion, prejudice, or favoritism is without merit.

We conclude that the plaintiff had a fair and impartial trial, and the trial court abused its sound judicial discretion in granting a new trial. The defendant made a bona fide offer to settle this cause prior to the time of trial, which was refused.

For the reasons given herein, the order of the trial court in sustaining the plaintiff's motion for new trial and setting aside the verdict of the jury is reversed and the cause remanded with directions to the trial court to reinstate the verdict of the jury and to enter judgment thereon. The costs incurred in this appeal and as incurred in the district court after the offer to confess judgment was made are to be taxed to the plaintiff.

REVERSED AND REMANDED WITH DIRECTIONS.

STATE OF NEBRASKA, APPELLEE, V. LEO KUBIK, APPELLANT.
67 N. W. 2d 775

Filed December 28, 1954. No. 33594.

1. **New Trial.** It is sufficient to state in a motion for new trial any ground relied upon in the language of the statute.
2. **Municipal Corporations.** If a municipal ordinance is inconsistent with a statute of the state the latter is the superior law and the ordinance is invalid.
3. ———. The word inconsistent used in the relation above stated means contradictory in the sense that two legislative provisions cannot coexist.

APPEAL from the district court for Douglas County: CARROLL O. STAUFFER, JUDGE. *Reversed and remanded with directions.*

Schrempp & Lathrop, for appellant.

Clarence S. Beck, Attorney General, *Richard H. Williams,* and *Charles A. Fryzek,* for appellee.

Heard before SIMMONS, C. J., CARTER, MESSMORE, YEAGER, CHAPPELL, WENKE, and BOSLAUGH, JJ.

BOSLAUGH, J.

Appellant was charged in the municipal court of the city of Omaha with and was convicted of violation of an ordinance prohibiting keeping and maintaining a disorderly house within the city. Appeal to the district court was taken by him. He was unsuccessful in that court and was adjudged to pay a fine and the costs. This appeal challenges the validity of the conviction and sentence.

The accused denied the charge made against him and questioned the validity of the ordinance. Appellee says the objection to the ordinance may not be considered on this appeal because the motion of appellant for a new trial did not make a specific assignment of the facts that he claims establish the lack of validity of the ordinance. A specification of the motion for new trial is that the verdict of the jury finding appellant guilty was contrary to law and is not sustained by evidence. The grounds for a new trial are statutory. § 25-1142, R. R. S. 1943. A cause for new trial specified therein is that the verdict is not sustained by evidence or is contrary to law. It is sufficient to state any ground relied upon for a new trial in the language of the statute without further or other particularity. § 25-1144, R. R. S. 1943; Lund v. Holbrook, 153 Neb. 706, 46 N. W. 2d 130; Harsche v. Czyz, 157 Neb. 699, 61 N. W. 2d 265. The assignment of appellee in this regard is not supported by fact or law.

The Tavern Owners, Bartenders and Waiters Club, designated herein the club, has been since February 5, 1952, a Nebraska corporation. It is a nonprofit organization without capital stock with its place of business at 1417½ Harney Street in Omaha. Its purposes and objects are to promote good will and cooperation among tavern owners and their employees; to study and discuss problems of tavern owners and proposed legislation which relates to or affects them as a class; to provide a place of recreation for members, their families, and

guests; to sponsor and promote civic projects; and to acquire, use, and dispose of property as the board of directors decides is for the good of the corporation. It is governed by a board of its members and its affairs are, subject to the action of the board, conducted by a president, a vice president, and a secretary-treasurer. The membership of the club is limited to tavern owners, bartenders, waiters, waitresses, and persons who have an actual interest in the aims and objectives of the corporation. Appellant was its manager. Only members and their guests were admitted to the place where the affairs of the club were conducted. The club did not have, sell, or give away intoxicating liquors. A member of the club could bring to its place of business intoxicating liquor belonging to him and leave it in the custody of the manager. The bottle of liquor of the member was in such instance marked and identified as the property of the owner, and he was given a receipt for it. The owner and his guests only were served from his bottle. Many of the members had intoxicating liquor there under the circumstances and conditions stated. The liquor brought to and left in the custody of the club was owned by the member and not the club. The container of it had attached the name and number of the member. The liquor could only be used by the member and any guest of the member.

The conduct of the club, its manager, its members, and the guests of members was decorous, orderly, without disturbance of anyone, and free from complaint or objection as being improper or illegal, except the charge made herein that appellant, the manager, maintained the premises of the club for the purpose of permitting the drinking of intoxicating liquor thereon without having procured a license therefor.

The complaint, the basis of this prosecution, does not specify any act of appellant. It charges only that appellant kept and maintained a disorderly house at a designated location in Omaha, contrary to the ordinance

of the city. There was produced at the trial as a part of the evidence an ordinance which contains the following: "It shall be unlawful for any person * * * to maintain * * * any portion of his premises for the purpose of gambling therein * * *; or to sell or offer for sale, keep or give away, any intoxicating liquors, or to permit the drinking of any intoxicating liquors upon said premises, unless he has first procured a license therefor; * * *." The Nebraska Liquor Control Commission had not issued a license to appellant or the corporation. There is no charge or evidence that there had been gambling or a sale or an offer to sell or to give away intoxicating liquor by appellant or the club on its premises described in the complaint. The gist of the evidence is that at the time and place stated in the complaint there were persons on the premises, some of whom were seated and engaged in conversation, others were dancing, and a majority of them were drinking intoxicating liquor.

Appellant contends that the ordinance is invalid because it is inconsistent with the Nebraska Liquor Control Act. The decisive issue is the validity or invalidity of the ordinance, the basis of this case. A municipal corporation derives all of its power from the state and it has only such authority as the Legislature has granted to it. If the ordinance conflicts with the statute the latter is the superior law and the former is not enforcible. Phelps Inc. v. City of Hastings, 152 Neb. 651, 42 N. W. 2d 300. The word inconsistent as used herein means contradictory in the sense that two legislative provisions cannot coexist. The court is obligated to harmonize, to the extent it can legally be done, state and municipal enactments on the identical subject. Bodkin v. State, 132 Neb. 535, 272 N. W. 547.

The authority to regulate all phases of the control of the manufacture, distribution, sale, and traffic in alcoholic liquors is vested exclusively in the Liquor Control Commission except as otherwise specifically delegated

by the Liquor Control Act. § 53-116, R. R. S. 1943; Phelps Inc. v. City of Hastings, *supra;* State ex rel. Nebraska Beer Wholesalers Assn. v. Young, 153 Neb. 395, 44 N. W. 2d 806. A limitation on the power of the commission is the following provision of the Liquor Control Act: "* * * nothing herein contained shall prevent the possession and transportation of alcoholic liquor for the personal use of the possessor, his family and guests; * * *." § 53-102, R. R. S. 1943. This authorizes any person who can lawfully acquire intoxicating liquor to possess, transport, have, and keep it on premises owned, occupied, or controlled by him subject to the restriction that it must be for the personal use of the possessor, his family, and guests. The ordinance seeks to prohibit any unlicensed person from possessing or having or keeping intoxicating liquor for the use of the possessor, his family, and guests upon any premises owned, occupied, or controlled by the owner of the liquor. There is nothing in the language of the statute quoted above to suggest that the possessor of intoxicating liquor secured for the use of himself, his family, and guests must be kept and used away from the premises owned by the possessor. The essence of the ordinance is that it is unlawful for any person to maintain any portion of his premises to keep intoxicating liquor on or in it or to permit the drinking of any intoxicating liquor upon his premises notwithstanding the fact that the liquor is had solely for the use of the owner, his family, and guests. This is in direct conflict and inconsistent with the clear language and provisions of the statute last quoted herein. The ordinance is unenforcible.

The judgment and sentence in this case should be and they each are reversed and the cause remanded to the district court with instructions to dismiss the case and discharge the appellant.

REVERSED AND REMANDED WITH DIRECTIONS.

BOYD MOTOR COMPANY, A CORPORATION, APPELLEE, V. COUNTY OF BOX BUTTE, APPELLANT.

67 N. W. 2d 774

Filed December 28, 1954. No. 33678.

1. **Statutes.** In the interpretation of a statute it will be presumed that the Legislature inserted every part thereof for a purpose, and effect will therefore be given, if possible, to every word, clause, and sentence in the act.
2. **Taxation.** Motor vehicles not subject to a motor vehicle tax, as that term is defined in section 77-1238, R. S. Supp., 1953, including dealers' motor vehicles not registered for operation on the highways, are subject to an ad valorem tax computed according to the schedule of values fixed by the State Board of Equalization and Assessment, as provided in section 77-1241.01, R. S. Supp., 1953.
3. ———. The effect of section 77-1242, R. S. Supp., 1953, is to provide that after a dealer's stock of motor vehicles has been valued in accordance with the schedule of values fixed by the State Board of Equalization and Assessment, the assessment and levy of the tax will be made in the same manner and in the same proportion of actual value as other merchandise.

APPEAL from the district court for Box Butte County: EARL L. MEYER, JUDGE. *Reversed and remanded.*

Clarence S. Beck, Attorney General, *Clarence A. H. Meyer,* and *Robert R. Moran,* for appellant

Stubbs & Metz and *Chambers, Holland & Groth,* for appellee.

Heard before SIMMONS, C. J., CARTER, MESSMORE, YEAGER, CHAPPELL, WENKE, and BOSLAUGH, JJ.

CARTER, J.

Plaintiff appealed from an order of the county board of equalization of Box Butte County raising the valuation of a stock of automobiles, returned by it in the amount of $9,495.17, to the sum of $14,390 in order to conform to the valuation of motor vehicles as determined by the State Board of Equalization and Assessment. The County of Box Butte demurred to the peti-

tion. The trial court overruled the demurrer and, when the county stood on its demurrer, entered judgment in favor of the appellee in accordance with the prayer of the petition. The county appeals.

The petition alleges that appellee is a regularly licensed dealer in motor vehicles in Box Butte County. Within the time and manner specified by law appellee returned to the county assessor an inventory of the motor vehicles it had on hand on March 10, 1954, for the purpose of ad valorem assessment for tax purposes. The actual value of each of the motor vehicles so returned, as reported by appellee, is set out in the petition. On June 7, 1954, the county board of equalization raised the value of the motor vehicles and assessed the same on the basis of the schedule of valuation prepared by the State Board of Equalization and Assessment on June 13, 1953. Appellee alleges that the latter basis of valuation relates to registered motor vehicles only, and does not relate to the taxation of motor vehicles described in section 77-1242, R. S. Supp., 1953. Appellee asserts that the assessed valuation as fixed by the State Board of Equalization and Assessment is not uniform and proportionate with other property and constitutes a discrimination in favor of other owners of property of the same class in Box Butte County.

The demurrer admits the truth of all facts well pleaded. We accept as true, therefore, that the actual value of the motor vehicles involved, as reported by appellee, is $9,495.17. We also accept as true that the actual valuation for assessment purposes as fixed by the State Board of Equalization and Assessment is $14,390.

The contentions of the parties are as follows: The appellee contends that his stock of motor vehicles shall be valued by the county assessor in the same manner as other merchandise as of March 10th, subject to review by the county board of equalization, under the provisions of section 77-1242, R. S. Supp., 1953. The county asserts that the value of appellee's stock of motor

vehicles is fixed by the State Board of Equalization and Assessment under section 77-1241.01, R. S. Supp., 1953, and that the method of valuing motor vehicles for tax purposes owned by dealers is the same as motor vehicles owned by persons other than dealers.

It is contended by appellee that Article VIII, section 1, Constitution of Nebraska, was amended in 1952 in such a way as to exclude the necessity for uniform and proportionate valuations in the valuation of motor vehicles for taxation purposes. In view of the meaning of the statutes controlling the result of the present litigation we do not deem it necessary to pass upon the effect of this amendment to the Constitution. It is plain, however, that motor vehicles could be taxed as a separate class of tangible property.

In 1953 the Legislature adopted Legislative Bill No. 165 which has been incorporated into Chapter 77, R. S. Supp., 1953. The statutes directly involved in the present case are sections 77-1241.01 and 77-1242, R. S. Supp., 1953. They provide as follows:

"Motor vehicles not subject to a motor vehicle tax, including dealers' motor vehicles on hand on January 1 and not registered for operation on the highways, shall be subject to the ad valorem tax on tangible property; such tax shall be computed according to the schedule of values fixed by the State Board of Equalization and Assessment; Provided, that in the event a motor vehicle which has been assessed for ad valorem tax purposes, except dealers' motor vehicles on hand January 1, is later registered during the registration year for which taxes have been assessed, the owner against whom such ad valorem taxes have been assessed shall be credited with the proportionate amount for the period during which the motor vehicle tax has been paid." § 77-1241.01, R. S. Supp., 1953.

"Dealers in motor vehicles shall report their vehicles on hand March 10 of each year as merchandise, describing each vehicle thus returned for ad valorem tax

assessment, in the same manner and at the same proportion of actual value that other merchandise is assessed." § 77-1242, R. S. Supp., 1953.

The county contends that the fixing of the valuation of motor vehicles not subject to a motor vehicle tax, including dealers' motor vehicles on hand on January 1 and not registered for operation on the highways, is controlled by the words, "such tax shall be computed according to the schedule of values fixed by the State Board of Equalization and Assessment," found in section 77-1241.01, R. S. Supp., 1953. The appellee asserts that the words, "in the same manner and at the same proportion of actual value that other merchandise is assessed," found in section 77-1242, R. S. Supp., 1953, is the controlling provision.

After the amendment of Article VIII, section 1, of the Constitution, the Legislature at its 1953 session enacted the foregoing provisions, among others. Prior to their enactment, motor vehicles, including a dealer's stock, were taxed the same as other tangible property except that the county assessor in computing the actual value was to consider the schedule of actual valuations prepared by the state Tax Commissioner. All taxes on motor vehicles became due on November 1 and became delinquent February 1 following. Dealers in motor vehicles were required to report their vehicles on hand on March 10 as merchandise, describing each vehicle thus returned. §§ 77-1239 to 77-1242, R. R. S. 1943. By the 1953 act the Legislature undertook to require the payment of taxes on registered motor vehicles in advance, based upon the values certified to the county assessor by the State Board of Equalization and Assessment. § 77-1240, R. S. Supp., 1953. There is no issue on this point in the present case. The question here raised is the method provided for valuing motor vehicles which were not registered, including dealers' motor vehicles on hand on January 1 and not registered for operation on the highways.

It is a fundamental rule of statutory construction that effect be given, if possible, to every word, clause, and sentence contained in a legislative act so that no part of its provisions shall be inoperative or superfluous, if it can be avoided. Nacke v. City of Hebron, 155 Neb. 739, 53 N. W. 2d 564. In the interpretation of a statute it will be presumed that the Legislature inserted every word, clause, and sentence for a purpose and intended that every part thereof should have effect. It will not be construed in such a manner as to render it partly ineffective or nugatory if a reasonable construction will make it effective. That construction is favored which will render every word, clause, and sentence operative.

With the foregoing rule in mind, we must necessarily conclude that when the Legislature said in section 77-1241.01, R. S. Supp., 1953, that motor vehicles not subject to a motor vehicle tax, as the latter term is defined in section 77-1238, R. S. Supp., 1953, including dealers' motor vehicles not registered for operation on the highways, shall be subject to the ad valorem tax on tangible property and "such tax shall be computed according to the schedule of values fixed by the State Board of Equalization and Assessment," it could have meant only that such motor vehicles were to be valued according to the schedule of values fixed by the State Board of Equalization and Assessment. The language is clear and unambiguous, and is subject to no other construction.

Appellee asserts, however, that section 77-1242, R. S. Supp., 1953, is just as clear and unambiguous in specifying that "Dealers in motor vehicles shall report their vehicles on hand March 10 of each year as merchandise, describing each vehicle thus returned for ad valorem tax assessment, in the same manner and at the same proportion of actual value that other merchandise is assessed." We think the foregoing section can be completely harmonized with section 77-1241.01, R. S. Supp.,

1953, in such a way as to determine the clear intent of the act. We point out that section 77-1242, R. S. Supp., 1953, does not provide how the actual value shall be determined. Such actual value is determined in the manner specifically prescribed by section 77-1241.01, R. S. Supp., 1953. It is provided by section 77-1242, R. S. Supp., 1953, that dealers will report their vehicles on hand on March 10 as merchandise, and describe each vehicle thus returned for ad valorem tax assessment in the same manner and at the same proportion of the actual value that other merchandise is assessed. Consequently, the actual value of a dealer's stock of motor vehicles is computed according to the schedule furnished by the State Board of Equalization and Assessment, and section 77-1242, R. S. Supp., 1953, is thereafter applied to it. If other merchandise is assessed at 50 percent of value, the dealer's stock of cars is so assessed. The tax is not payable in advance but becomes due on November 1 of the year assessed and becomes delinquent on December 1 thereafter as provided by section 77-1241, R. S. Supp., 1953.

Such a construction of the statutes makes it clear that dealers' motor vehicles were to be valued for taxation purposes in accordance with the schedule of values fixed by the State Board of Equalization and Assessment but otherwise the assessment was to be in conformity with the manner and proportion that other merchandise is assessed. Such a construction makes the statutes consistent throughout and gives effect to each and every part thereof. So construed as a whole, no ambiguity appears and a reasonable intendment is obtained.

We conclude that the trial court was in error in holding that the schedule of values fixed by the State Board of Equalization and Assessment had no application to dealers' motor vehicles described in section 77-1242, R. S. Supp., 1953. The demurrer of the county should have been sustained.

REVERSED AND REMANDED.

THE OMAHA NATIONAL BANK, PLAINTIFF, V. FRANK B. HEINTZE, TREASURER OF THE STATE OF NEBRASKA, ET AL., DEFENDANTS.

FIRST NATIONAL BANK OF OMAHA, PLAINTIFF, V. FRANK B. HEINTZE, TREASURER OF THE STATE OF NEBRASKA, ET AL., DEFENDANTS.

THE UNITED STATES NATIONAL BANK OF OMAHA, A CORPORATION, PLAINTIFF, V. FRANK B. HEINTZE, TREASURER OF THE STATE OF NEBRASKA, ET AL., DEFENDANTS.

67 N. W. 2d 753

Filed December 31, 1954. Nos. 33720, 33721, 33722.

Constitutional Law: Taxation. Section 77-709, R. R. S. 1943, insofar as it purports to authorize a levy of taxes upon the shares of stock of banks, industrial loan and investment companies, and trust companies, in excess of four mills on the dollar of the actual value thereof as provided by section 77-703, R. S. Supp., 1953, violates the rule of uniformity as to class required by Article VIII, section 1, of the Constitution of this state and to that extent is unenforceable.

Original Action. *Judgment for plaintiffs.*

Wells, Martin & Lane, Finlayson, McKie & Kuhns, and *Morsman, Maxwell, Fike & Sawtell,* for plaintiffs.

Clarence S. Beck, Attorney General, *Clarence A. H. Meyer,* and *Homer L. Kyle,* for defendants.

Heard before SIMMONS, C. J., CARTER, MESSMORE, YEAGER, CHAPPELL, WENKE, and BOSLAUGH, JJ.

SIMMONS, C. J.

These three cases are original actions for declaratory judgments to determine the rate of taxation of plaintiffs' shares of stock. The precise question is whether the capital stock of the plaintiffs is stock assessable at four mills on the dollar of actual value as provided in section 77-703, R. S. Supp., 1953, or at eight mills on the dollar of the actual valuation thereof as provided in section 77-709, R. R. S. 1943.

The plaintiffs are banks organized under the law of

the United States with their principal places of business in Douglas County. By the provision of section 77-709, R. R. S. 1943, the capital stock of banks is assessed as such, the bank is required to pay the tax, and has a lien on the stock for the tax. The defendants are the State Treasurer, the county treasurer, and the county clerk of Douglas County. Issues are made here by petitions of the plaintiffs and general demurrers of the defendants.

The legislative and judicial history of the intangible tax laws, prior to the present situation, may be found in our decisions in State Bank of Omaha v. Endres, 109 Neb. 753, 192 N. W. 322, Central National Bank v. Sutherland, 113 Neb. 126, 202 N. W. 428, and State ex rel. Spillman v. Ord State Bank, 117 Neb. 189, 220 N. W. 265.

Supplementing those opinions, reference should be made to Laws 1927, chapter 169, page 499. The Legislature there provided for Class A intangibles taxable at two and one-half mills on the dollar and for Class B intangibles taxable at the rate of five mills on the dollar with the proviso as to Class B that "shares of stock in banks and all moneyed capital that comes into competition with the business of banks or banking in the state of Nebraska within the meaning of Section 5219 of the Revised Statutes of the United States shall not be classified and taxed under this section." It was further provided: "* * * that all moneyed capital that comes into competition with the business of banks in the state of Nebraska within the meaning of Section 5219 of the Revised Statutes of the United States shall be taxed at the same rate that bank stock is taxed." Laws 1927, c. 169, § 2, p. 502. It then changed the rate of taxation on bank stocks from "the same rate as tangible property" (see Laws 1921, c. 133, art. VIII, § 4, p. 584) to "seventy per cent of the mill rate at which tangible property is assessed." This was obviously an attempt of the Legis-

lature to meet the impact of the act of Congress as set out in the decisions above cited.

Then came the 1929 act. Laws 1929, c. 168, p. 577. In this act, the Legislature placed money and certain other intangibles in Class A and all other kinds of intangible property were placed in Class B. The Legislature did not re-enact the provisos above quoted relating to taxation of bank stocks. The Legislature provided for a tax of two and one-half mills on the dollar for Class A intangibles. This provision is now section 77-702, R. R. S. 1943. It then provided for a tax of eight mills on the dollar on Class B intangibles and this provision became section 77-703, R. R. S. 1943. It then provided, by amendment of the language of the 1927 act that: "The said two and one-half mills' tax and the eight mills' tax respectively, shall be in lieu of all other taxes upon such intangible property * * *." Laws 1929, c. 168, § 1, p. 577. This became, in part, section 77-704, R. R. S. 1943. As to bank stocks, the 1929 Legislature amended the 1927 act and provided that they should be listed and assessed as intangible property at the rate of eight mills on the dollar. This became section 77-709, R. R. S. 1943.

The statutes so remained until 1953 when the Legislature enacted Laws 1953, chapter 266, page 878.

The title recited that it was an act to amend sections 77-701, 77-703, and 77-704, R. R. S. 1943, and, so far as pertinent here, to reduce the rate of taxation of Class B intangible property. The amendment of section 77-701, R. R. S. 1943, provided that book accounts should be included in Class A. It need not further be noted. The Legislature did not change the rate on Class A intangibles. It remained at two and one-half mills. The Legislature then amended section 77-703, R. R. S. 1943, by reducing the rate from eight mills to four mills on intangible property in Class B. This is now section 77-703, R. S. Supp., 1953. The Legislature then amended section 77-704, R. R. S. 1943, by deleting therefrom the words "at two and one half and eight mills respectively,"

so as to have the sentence read: "The tax upon intangible property in Classes 'A' and 'B' shall be in lieu of all other taxes thereon * * *." This is now section 77-704, R. S. Supp., 1953.

The Legislature made no reference to section 77-709, R. R. S. 1943, either in the title or body of the act. It remains as before, providing for a tax on bank stocks of eight mills on the dollar.

The plaintiffs urge here that the clause of section 77-709, R. R. S. 1943, to wit: "at the rate of eight mills on the dollar of the actual valuation thereof," has been repealed by implication. The defendants counter that such would be an amendment by implication and not permissible under the provision of Article III, section 14, of the Constitution which provides in part: "* * * And no law shall be amended unless the new act contain the section or sections as amended and the section or sections so amended shall be repealed."

We need not determine either of those contentions.

The statutes as they now read provide for a tax on corporate stock generally at the rate of four mills on the dollar and a tax of eight mills on the dollar on bank stock. We are here concerned specifically with that situation. This is the legislative situation which we had in State ex rel. Spillman v. Ord State Bank, *supra.* We there held that a tax on the bank stock in excess of the tax on the shares of corporate stock generally was an invalid tax. This decision rests on the constitutional requirement of uniformity as to class. Art. VIII, § 1, Constitution. The same result was reached in Century Oil Co. v. Department of Agriculture, 112 Neb. 73, 198 N. W. 569. There a statute levied an inspection fee on gasoline. The law was valid when enacted. Later the fees collected were far in excess of the reasonable cost of inspection. The law was held unenforceable as to the excess.

Here the plaintiffs claim that the tax above four mills is an invalid tax. They offer to pay the four mills tax.

We hold that section 77-709, R. R. S. 1943, insofar as it purports to authorize a levy of taxes upon the shares of stock of banks, industrial loan and investment companies, and trust companies, in excess of four mills on the dollar of the actual value thereof as provided by section 77-703, R. S. Supp., 1953, violates the rule of uniformity as to class required by Article VIII, section 1, of the Constitution of this state and to that extent is unenforceable.

Plaintiffs ask for injunctive relief. We do not deem it necessary to enter such an order. Should such be necessary hereafter the way is open under the provisions of section 25-21,156, R. R. S. 1943, for the plaintiffs to apply for such an order.

JUDGMENT FOR PLAINTIFFS.

CASES DETERMINED

IN THE

SUPREME COURT OF NEBRASKA

JANUARY TERM, 1955

HARRIETTE FUSS, APPELLEE, V. GENE WILLIAMSON, APPELLANT.

68 N. W. 2d 139

Filed January 7, 1955. No. 33530.

1. **Trial.** A motion for a directed verdict must, for the purpose of a decision thereon, be treated as an admission of the truth of all material and relevant evidence submitted on behalf of the party against whom the motion is directed, and said party is entitled to have every controverted fact resolved in his favor, and to have the benefit of every inference that can reasonably be deduced from the facts in evidence.
2. **Automobiles.** When a driver of an automobile who has entered an intersection for the purpose of negotiating a turn in the proper lane of traffic fails to see an automobile entering the intersection to the rear and not shown to be in a favored position, the presumption is that the driver of the approaching automobile will respect his right-of-way, and the question of his contributory negligence in proceeding to cross the intersection is a jury question.
3. **Negligence.** Where the evidence is conflicting and from the facts and circumstances proved reasonable minds might draw different conclusions concerning any negligence or lack of negligence, as well as comparative or contributory negligence, then the trial court should submit such issues to the jury.
4. **Appeal and Error.** It is reversible error for the court to include, in its instructions to the jury, allegations of fact found in the pleadings but which have not been supported by any evidence.

5. **Trial: Appeal and Error.** The court should submit to the jury only such issues as find some support in the evidence, and where an issue is submitted without support in the evidence and is calculated to mislead the jury in the consideration of the facts to the prejudice of the complaining party, the judgment must be reversed.

APPEAL from the district court for Lancaster County: HARRY A. SPENCER, JUDGE. *Affirmed.*

Baylor, Evnen & Baylor, for appellant.

Edwin F. Dosek and *Davis, Healey, Davies & Wilson,* for appellee.

Heard before SIMMONS, C. J., CARTER, MESSMORE, YEAGER, CHAPPELL, WENKE, and BOSLAUGH, JJ.

MESSMORE, J.

The plaintiff, Harriette Fuss, brought this action at law in the district court for Lancaster County to recover damages for personal injuries sustained by her due to a collision between an automobile driven by her and an automobile driven by the defendant. The cause was tried to a jury, resulting in a verdict in favor of the defendant. The plaintiff filed a motion for new trial which was sustained. From the order sustaining the motion for new trial, the defendant appeals.

For convenience we will refer to the parties as they were designated in the district court.

The defendant contends that the plaintiff was guilty of negligence and the defendant free of negligence, each as a matter of law, or that, in comparison, the negligence of the plaintiff was more than slight and the negligence of the defendant was less than gross, and accordingly the defendant's motion for directed verdict should have been sustained; and that as a matter of law the plaintiff was guilty of contributory negligence that would bar her right to recover in the instant case. This assignment of error requires an examination of the evidence.

The record discloses that the plaintiff, Harriette Fuss, on February 23, 1952, was using her husband's 1941 Packard four-door sedan. With her were two of her children, Daniel, Jr., age 7, and Marlene Kay, age 5, who were occupying the back seat of the automobile. The plaintiff had driven to Gold and Company's store and parked in front of the store on the south side of O Street, about a quarter of a block west of the intersection of O and Eleventh Streets in Lincoln, Nebraska. She backed the automobile out from in front of the store intending to return to her home. As she did so, she proceeded east on O Street in the south traffic lane and stopped at the traffic light which was red. Her automobile was the first car in line. When the traffic light turned green, she started to make a right turn to go south on Eleventh Street. At that time pedestrians were crossing the cross walk going east and west on O Street. The cross walks were marked, and were about 20 feet in width. She stopped her car immediately north of the cross walk on the south side of O Street. At that time she was in the west, or right hand lane, with her car facing southeast, a little more south than east. The front wheels of the car were about 2 feet north of the north marker for the east-west cross walk on O Street. She waited until the traffic light changed, and started to complete the right turn. She testified that there was a police officer in the center of Eleventh Street who motioned her to proceed. She started to move her car but failed to get completely across the cross walk when the collision occurred between the car she was driving and the defendant's car. When the collision occurred, she was 3 feet south of the south border of the cross walk, completely in the west lane of traffic, proceeding south. The left front fender and bumper of her car were hit by the right rear fender of the defendant's car. When her car was hit, it came to a stop. The defendant's car proceeded about a quarter of a block south on Eleventh

Street after the accident. When his car stopped, it was in the west lane of traffic going south on Eleventh Street, headed directly south. The force of the impact caused the plaintiff to be shaken up, and threw her left arm against the left front door and her stomach into the steering wheel. The plaintiff's two children were thrown to the floor at the time of the impact. She was 3 months pregnant at the time of the accident, and was very nervous after the accident. She testified further that the defendant got out of his car and she got out of the car she was driving, and they met between the two cars. The defendant told her that he did not see her. She fixed the point of impact as 2 feet south of the pedestrian cross walk, in the middle of the dividing line of the two south-bound traffic lanes. She waited for the police officer to come and fill out an accident report, after which she proceeded home.

On cross-examination she testified that when she proceeded east on O Street, the right side of her car was 15 feet from the south side of O Street, and when she stopped at the red traffic light her automobile was about 2 feet from the rear of the cars parked on O Street, in the south lane of traffic. When she drove up to the traffic light, she stopped 2 feet west of the cross walk running north and south on O Street on the west side of Eleventh Street. When the traffic light changed, she proceeded about 30 feet before she stopped her car. Her car was entirely off the north-south cross walk on the west side of Eleventh Street when she came to a stop at the intersection. The front of her car was about 2 feet from the north boundary of the east-west cross walk. The right side of her car was about 14 feet from the west curb of Eleventh Street, and the right front wheel of her car was about 1 foot from the north line of the east-west cross walk. The right front wheel of her car was a little east of the back end of the cars parked diagonally on the west side of Eleventh Street.

She further testified that she did not at any time look to see if there was any car coming from the north, nor did she see any car ahead of her. She did not see any traffic on Eleventh Street. She testified that she would have looked if it had not been for the police officer who was directing traffic. She did not see the defendant's car until the collision occurred. He was in the west lane of traffic when he came to a stop, and the right side of his car was from 1 to 2 feet from the cars parked on the west side of Eleventh Street. The defendant's car did go straight south, but he had to turn to the right to get into the west lane. When the collision occurred, he was in the east lane of the two south-bound lanes on Eleventh Street, and the left front fender of her car was on the white line separating the two lanes for south-bound traffic on Eleventh Street. There is evidence by the plaintiff that when the collision took place the left front wheel of her car was about 23 feet east of the west curb of Eleventh Street. When the collision occurred, she immediately applied her brakes and kept them on until she came to a stop. She was driving 10 miles an hour, and by the use of her brakes could stop her car within the distance of 2 or 3 feet at that speed. She further testified that she believed the defendant said he was going between 15 and 20 miles an hour, but she was not sure; and that he told the police officer he was in second gear and was going between 15 and 20 miles an hour.

It was agreed by the parties that at the time of the accident the intersection of Eleventh and O Streets was a congested area.

The defendant testified that he owned a 1940 Ford coach. On the day in question he drove to the intersection of O and Eleventh Streets. His wife and small son were with him. He intended to let his wife out of the car at the middle, or east, door of Gold's store. As he came up to the traffic light on the north side of O Street,

the light was red. There was a car ahead of him and one on his left. The car ahead of him went straight across the intersection. He was 15 to 20 feet behind that car, and proceeded south across the intersection. When he started his car after the traffic light turned green, he saw a car sitting at an angle at the southwest side of the intersection. At that time he was just past the stop light on the north side of O Street, before he got to the middle of the street. The automobile he saw was at a southeasterly angle, headed southeast. The left front wheel of that car was 14 to 15 feet from the west curb of Eleventh Street. There was nothing interfering in his lane of traffic. He could see straight ahead of him. The back end of the most northerly car parked at Eleventh and O Streets was not more than 1 or 2 feet from the cross walk on the south side of O Street. The cars parked on the west side of Eleventh Street extended out about 15 feet. The defendant further testified that he shifted into second gear and his speed was between 5 and 10 miles an hour. He was 16 to 17 feet from the west curb on Eleventh Street. He saw the plaintiff's car when he first entered the intersection, and the next thing he knew he heard the noise of the fenders colliding. He did not stop quickly—there was no hurry or jamming of brakes. He stopped 25 to 35 feet past the intersection. When he stopped, he got out of his car and walked back and saw the plaintiff's car. There was a pile of dirt 2 or 3 feet inside the north line of the cross walk. When he crossed the intersection there was no police officer there directing traffic. Within 3 to 6 minutes a motorcycle policeman arrived. The defendant testified that when he entered the intersection the plaintiff's car was back 2 or 3 feet, headed to the southeast, more to the east than to the south, at about a 45 degree angle. As he crossed the intersection, he saw nothing in motion except the car in front of him, and the car to his left. He was looking straight ahead. The plain-

tiff told him she did not see him coming. He denied that he ever told anyone his speed was 15 to 20 miles an hour, but that it was 5 to 10 miles an hour. He did not see the plaintiff at the time of the impact. When he crossed the intersection, the left front wheel of the plaintiff's car was flush with the back end of cars parked on the west side of Eleventh Street, about 14 feet from the west curb. The back end of the plaintiff's car was across the north-south cross walk, and the right front side 3 feet distant from the north line of the cross walk. When he saw the plaintiff's car at the time he was on the north side of the intersection of Eleventh and O Streets, he testified that it was not difficult to realize what her subsequent intention was, that she was in the process of planning to complete her turn to the right, and that she was standing still at that point. The plaintiff's car traveled from 3 to 4 feet north of the cross walk to a point approximately 3 feet south of the north edge of the cross walk.

The inspector of police in charge of traffic testified that Eleventh Street south of O Street is 70 feet wide. The center line of Eleventh Street would be 35 feet west of the east curb, or 35 feet east of the west curb. The parking lanes are 10 feet wide. There is angle parking on Eleventh Street. There is a total time of 5 seconds from the time of the flashing green light to the red light on the traffic signal.

One of the officers assigned to direct traffic at Eleventh and O Streets on that day testified that he walked by the intersection and went into a cafe on the east side of Eleventh Street. When he came out of the cafe about 4:05 p. m., his attention was called to the accident, and he directed traffic around the automobiles until the motorcycle officer arrived. He thereafter took his position in the intersection. He did not work traffic before the accident, and no one was doing so when he passed the intersection just prior to the time of the accident.

The motorcycle officer testified that the call reporting the accident was received at 6 minutes after 4 p. m. He arrived at the scene of the accident about 5 minutes thereafter. He saw the plaintiff and the defendant standing near the vehicles. The plaintiff's car was approximately 10 feet south of the intersection, that is, south of the south curb thereof. He did not recall where the defendant's car was located. The plaintiff's car was just behind the parked cars on Eleventh Street. The parked cars took up about 15 feet of space, which would put the plaintiff's car 16 feet from the west curb, headed straight south. The plaintiff told him she did not see the defendant when he started forward from the cross walk. The defendant stated to him that he proceeded across the intersection and saw the plaintiff's car stopped at the intersection waiting for pedestrians to clear the cross walk. As the defendant passed, the plaintiff suddenly started forward and collided with the right rear portion of his car. The plaintiff stated that she was traveling 2 miles an hour before the accident and had just started her car. The defendant told the officer his speed was from 6 to 8 miles an hour at the time. This officer fixed the point of impact at approximately 18 feet east of the west curb and within 1 foot either to the north or south of the white line running across the intersection, that is, the most northern line. He determined the point of impact by the amount of debris left on the pavement which would cover a 2-foot circle.

In considering the defendant's assignment of error as above set out, the rule is: "A motion for a directed verdict must, for the purpose of a decision thereon, be treated as an admission of the truth of all material and relevant evidence submitted on behalf of the party against whom the motion is directed, and said party is entitled to have every controverted fact resolved in his favor, and to have the benefit of every inference that can reasonably be deduced from the facts in evidence."

Moncrief v. Interstate Transit Lines, 129 Neb. 168, 261 N. W. 163. See, also, Davis v. Spindler, 156 Neb. 276, 56 N. W. 2d 107.

The defendant cites Bergendahl v. Rabeler, 133 Neb. 699, 276 N. W. 673. This case dealt with two vehicles approaching an intersection at the same time. The driver of the Bergendahl car had operated it without brakes. He failed to look to his right for cars approaching or, if he did look, failed to see that which was in plain sight. He failed to yield the right-of-way to defendant's car approaching from the right at approximately the same time. There is no evidence in the instant case that the plaintiff operated her car without brakes. It is true that she failed to look for cars to the right or left, and acted upon what she claimed to be the traffic officer's signal to proceed. The defendant's car was to the rear of the plaintiff's car when she was stopped ready to complete her turn south on Eleventh Street from O Street, and the defendant saw her in that position as he crossed the intersection. The cited case is not in point.

Other cases cited by the defendant in support of this assignment of error such as Troup v. Porter, 126 Neb. 93, 252 N. W. 611; Cuevas v. Yellow Cab & Baggage Co., 141 Neb. 662, 4 N. W. 2d 790; Trumbley v. Moore, 151 Neb. 780, 39 N. W. 2d 613; and Hammond v. Morris, 147 Neb. 600, 24 N. W. 2d 633, deal with pedestrians illegally or suddenly crossing streets or stepping out into traffic lanes without observing the traffic thereon. These cases are not applicable to the instant case. In the instant case the plaintiff was legally in the intersection, and properly stopped in the lane of traffic in which she had a right to be.

As stated in Huston v. Robinson, 144 Neb. 553, 13 N. W. 2d 885: "* * * we do not hold that the temporary stopping of an automobile on the proper side of a highway for a necessary purpose is negligence in all cases,

the right to stop when the occasion demands being an incident to the right of travel." The plaintiff had a right to stop to let the pedestrian traffic pass.

The plaintiff cites the following case, Halliday v. Raymond, 147 Neb. 179, 22 N. W. 2d 614, to the effect that a pedestrian, having obeyed the traffic signals and entered the traffic cross walk at a street intersection, ordinarily has the duty to look to the left and to the right for approaching traffic, but not to the rear. See, Johnson v. Anoka-Butte Lumber Co., 141 Neb. 851, 5 N. W. 2d 114.

"It is the duty of a pedestrian to look to the right and left in crossing an intersection and exercise reasonable care to observe cars coming from either direction. However, he has the right to assume that vehicles approaching from the rear will exercise ordinary care in keeping a lookout for him, and has no duty to maintain a lookout to the rear to avoid a charge of negligence." Johnson v. Griepenstroh, 150 Neb. 126, 33 N. W. 2d 549. See, also, Brenning v. Remington, 136 Neb. 883, 287 N. W. 776.

While the above-cited cases deal with pedestrians crossing intersections, the rule with reference to looking to the rear for approaching cars would be applicable in the instant case.

Where the evidence is conflicting and from the facts and circumstances proved reasonable minds might draw different conclusions concerning any negligence or lack of negligence, as well as comparative and contributory negligence, then the trial court should submit such issues to the jury. See Remmenga v. Selk, 150 Neb. 401, 34 N. W. 2d 757.

We conclude that the defendant's assignment of error that the court should have directed a verdict in his favor cannot be sustained.

The defendant contends that there is in the record no error prejudicial to the plaintiff, and the verdict of the

jury for the defendant and the judgment thereon should be reinstated.

Defendant cites Greenberg v. Fireman's Fund Ins. Co., 150 Neb. 695, 35 N. W. 2d 772, wherein this court said: "If, as in the instant case, the trial court gave no reasons for its decision, then the appellant meets the duty placed upon him when he brings the record here with his assignments of error * * *. The duty then rests upon the appellee to point out the prejudicial error that he contends exists in the record and which he contends justifies the decision of the trial court."

The plaintiff contends that the trial court did not err in sustaining her motion for a new trial; and that the trial court in its instruction No. 1 to the jury submitted certain charges of negligence against the plaintiff contained in the defendant's answer and cross-petition which affected the substantial rights of the plaintiff and resulted in prejudicial error.

In this connection, the trial court instructed the jury as follows: "a. She drove, used and operated said Packard automobile in such a manner as to endanger life, limb, person and property, in such a manner as to endanger or interfere with the lawful traffic or use of the streets and in such a condition as to endanger or interfere with the lawful traffic or use of the streets." It should be noted that the instruction is in the conjunctive for the reason that it provides "* * * and in such a condition as to endanger or interfere with the lawful traffic or use of the streets." It is indicated by the latter part of the instruction that it refers to the condition of the automobile driven by the plaintiff or the condition of the plaintiff driving the automobile. There is no evidence in the record that would remotely indicate that the brakes of the plaintiff's automobile were faulty or that the automobile was not in good mechanical condition. Some reference is made by the defendant to the testimony of a doctor to the effect that the plaintiff was

nervous due to her pregnancy and other events in her life, which led to the conclusion that she was not possessed of the stability of a normal person. We conclude, under the facts shown by the record, that the part of the instruction complained of is prejudicially erroneous.

In "i" of instruction No. 1, the court instructed the jury as follows: "She failed to give any warning that the right of way would not be yielded to the defendant or of her intention to drive into the path of and against the automobile of the defendant."

It is the contention of the plaintiff that she was under no duty to give a warning to the defendant that she was not yielding the right-of-way to him or that she was intending to drive south on Eleventh Street, for the reason that she was driving in a direct course south thereon, or was in such a position as to negotiate the turn to the south on Eleventh Street when the defendant first saw her when he stopped at the north side of the intersection of Eleventh and O Streets. She had no duty to observe to her rear that the defendant was crossing the intersection. The defendant was behind her, and she would be to the right of the defendant in the favored position. The plaintiff's car was not proceeding at such a speed that would require her to forfeit the right-of-way. We believe the giving of the above constituted prejudicial error.

There are other charges of negligence appearing in the answer and cross-petition of the defendant made against the plaintiff upon which the trial court instructed the jury, which fall in the same category as those above pointed out. However, inasmuch as a new trial is necessary, we assume that the trial court will instruct the jury on the proper charges of negligence appearing in the pleadings and supported by evidence on the new trial.

"Where a question of fact that is material to the case is submitted to the jury by the trial court, upon which

there is no evidence to support a finding, it constitutes prejudicial error." Simcho v. Omaha & C, B. St. Ry. Co., 150 Neb. 634, 35 N. W. 2d 501.

The court should submit to the jury only such issues as find some support in the evidence, and where an issue is submitted without support in the evidence and is calculated to mislead the jury in the consideration of the facts to the prejudice of the complaining party, the judgment must be reversed. See, Stiefler v. Miller, 120 Neb. 6, 231 N. W. 153; In re Estate of Keup, 145 Neb. 729, 18 N. W. 2d 63.

"It is reversible error for the court to include, in its instructions to the jury, allegations of fact found in the pleadings but which have not been supported by any evidence." Allen v. Clark, 148 Neb. 627, 28 N. W. 2d 439.

For the reasons given herein, we conclude that the trial court did not err in granting the plaintiff a new trial, and the judgment of the trial court in doing so should be, and is hereby, affirmed.

AFFIRMED.

JOSEPHINE E. EAGAN, APPELLANT, V. GEORGE O. HALL ET AL., APPELLEES.

68 N. W. 2d 147

Filed January 7, 1955. No. 33572.

1. **Executors and Administrators: Frauds, Statute of.** When one claims the estate of a deceased person under an alleged oral contract, the evidence of such contract must be clear, satisfactory, and unequivocal.
2. **Frauds, Statute of.** Such agreements are unenforcible under the statute of frauds because not made in writing. Even if proved, they are not enforcible unless there has been such performance as the law requires.
3. ———. The thing done which is claimed to constitute performance must be such as is referable solely to the oral agreement sought to be enforced, and not from some other relation.
4. **Specific Performance: Frauds, Statute of.** Nothing will be con-

sidered as part performance which does not put the party asserting it in a situation amounting to a fraud upon him unless the oral agreement be fully performed. Equity interferes in such cases only to prevent fraud or unconscionable advantage.

APPEAL from the district court for Chase County: VICTOR WESTERMARK, JUDGE. *Affirmed.*

Henry W. Curtis and *Charles M. Bosley,* for appellant.

Lloyd E. Christiansen and *Hines & Hines,* for appellees.

Heard before SIMMONS, C. J., CARTER, MESSMORE, YEAGER, CHAPPELL, WENKE, and BOSLAUGH, JJ.

CARTER, J.

This is a suit in equity upon an alleged agreement to make a will. The trial court found in favor of the answering defendants. The plaintiff appeals.

Dessie M. Hall and William M. Hall were married in 1914. They had no children. Dessie M. Hall died in February 1952. William M. Hall died in July 1952. Both were suicides. They left wills which contained identical language insofar as the issues of this case are concerned. The wills were drawn by the same attorney and executed at the same time before the same witnesses. They were executed on January 18, 1950, and shortly thereafter both wills were deposited with the county judge of Chase County. After the death of Dessie M. Hall on February 24, 1952, William M. Hall withdrew the will of Dessie M. Hall from the registry of the county court and offered the same for probate. It was admitted for probate and William M. Hall qualified as executor. No further proceedings were had prior to the death of William M. Hall on July 28, 1952. Prior to his death William M. Hall withdrew his will from the registry of the county court and it has not since been found. The parties stipulated, however, that the wills contained the same wording except for the change in names of the parties and the appropriate use of the words "wife" and "husband" therein.

The plaintiff is the mother of Dessie M. Hall and her only heir at law. The answering defendants are the brothers and sisters of William M. Hall and his only heirs at law, and their respective spouses.

The body of the will of Dessie M. Hall provided as follows:

"1. I hereby give, devise and bequeath one-half (½) of all my property, real, personal and mixed, and wherever located, to my beloved husband, William M. Hall, to be his absolutely and in fee simple forever.

"2. I hereby give, devise and bequeath the remaining one-half (½) of my property, real, personal and mixed and wherever located, to my beloved husband, William M. Hall, for and during the period of his natural lifetime, with full power to sell and convey said interest at any time or for the amount or amounts he deems for his best interest or for the best interest of my said estate; with full power to execute deeds of conveyance or other papers necessary to convey the same without any order of court therefor.

"3. I hereby give, devise and bequeath any property designated in paragraph two above that remains undisposed of at the time of the death of my said husband, William M. Hall, to my legal heirs then living."

The will of William M. Hall was drafted in the same language. The wills were executed at the same time and are alleged to be reciprocal.

The evidence shows that at the time of the marriage of Dessie M. and William M. Hall, the former possessed considerable more property than the latter. In addition to her financial contribution to the marriage Dessie M. Hall's father gave them five cows and some calves which constituted the beginnings of their cattle herd. They worked together over the years. Each owned some real estate. Their chattel property was owned by both. Joint bank accounts were established which passed to William M. Hall on Dessie's death under the joint ownership agreement with the banks in which their money was

deposited. The property in the hands of the executor of the estate of William M. Hall was appraised at $68,364.24.

It is alleged by the plaintiff that on or prior to the making of the wills on January 18, 1950, Dessie M. Hall and William M. Hall entered into an oral agreement to make mutual and reciprocal wills wherein similar bequests of property were made by one to the other with a mutual understanding that all the property owned by them would descend on the death of the survivor, one-half to the heirs at law of Dessie M. Hall and one-half to the heirs at law of William M. Hall.

The defendants alleged that the property in joint tenancy vested in William M. Hall upon the death of Dessie M. Hall by virtue of joint tenancy agreements and not by will, and alleged further that if any agreement was made it was barred by the statute of frauds for the reason that it was not reduced to writing and no partial performance referring to, resulting from, or in pursuance to such oral contract is alleged or was done which would remove the bar of the statute.

We find no evidence in the record sufficient to sustain a finding that an agreement was made by Dessie M. and William M. Hall that the property of both should be divided between the heirs at law of each upon the death of the survivor. The evidence largely confines itself to the contributions of each to the marriage, the method of handling their property in their lifetime including the property held by them in joint tenancy, and the execution of their wills at the same time containing identical dispositions of their property. There is evidence by one witness, Clarence Phillips, that he was asked by William M. Hall to read the two wills after which Hall said: "They are exactly alike, if I die first it goes to Dessie, and if Dessie goes first it goes to me, and the rest is divided half to my people and half to hers." This evidence does not point to or support the alleged oral agreement. It was clearly an interpreta-

tion of the wills which the witness had just finished reading and was not an assertion of the existence of any agreement, oral or written. There was no other evidence of similar import in the record.

The present case is controlled by the reasoning in Diez v. Rosicky, 145 Neb. 242, 16 N. W. 2d 155, wherein we said: "It is the rule in this state that an oral agreement to devise or bequeath property is void and unenforceable as being within the statute of frauds, unless there has been part performance by the promisee which is solely referable to the contract sought to be established and not such as might be referable to any other contract or situation. Taylor v. Clark, 143 Neb. 563, 13 N. W. 2d 621. It is evident that the making of a will whereby all of testator's property is left to his wife is not of itself evidence of the existence of a contract between the testator and his wife. Nor is it evidence of part performance of a contract in the absence of other evidence indicating clearly that it was made pursuant to such an agreement. We do not think the record shows by clear, definite, satisfactory and unequivocal evidence that a contract was made. Declarations of intention or of the wishes of the parties do not tend to support any such conclusion. Neither will an alleged agreement made after the execution of the will afford a valid consideration for any such an agreement. * * * The evidence was conflicting to such an extent that we cannot say that a contract was established by clear, satisfactory and unequivocal evidence. But irrespective of this conclusion, plaintiffs' case must fail for the reason that it is not shown that the part performance relied on imports the existence of the pleaded agreement and no other. The record shows nothing which could be interpreted as part performance of the alleged contract, other than the fact that Wenzl Diez did make a will, leaving all his property to his wife. There is nothing unusual about a husband leaving all his property to his wife, in fact it is more or less the usual thing that is done. To

meet the requirements of the rule, the act alleged to constitute part performance must be such that its existence can be accounted for only by the existence of the pleaded agreement. It must refer to, result from, or be in pursuance of the oral contract sought to be enforced, and not from some other relation. The evidence produced does not meet this test." See, also, Overlander v. Ware, 102 Neb. 216, 166 N. W. 611; Lunkwitz v. Guffey, 150 Neb. 247, 34 N. W. 2d 256.

In the case at bar an oral contract was not established by clear, satisfactory, and unequivocal evidence. In fact, there was no evidence in the record tending to support any such agreement. In addition thereto, there is no evidence of part performance which imports the existence of the pleaded oral agreement and no other. To meet the requirements of the rule the act alleged to constitute part performance must be such that its existence can be accounted for only by the existence of the pleaded oral agreement. It must refer to, result from, or be in pursuance of the oral agreement sought to be enforced, and not from any other relation. Such was not the case here.

Plaintiff relies on Brown v. Webster, 90 Neb. 591, 134 N. W. 185, 37 L. R. A. N. S. 1196. The case is clearly distinguishable. It was decided on demurrer. The petition alleged that the husband and wife made an oral agreement by the terms of which it was agreed that the survivor should, on the death of the other, become the exclusive owner of all the property. Each made a will in furtherance of the agreement. Relying on the agreement the wife permitted the husband to use her property of considerable value as if it were his own. Just before his death the husband made a will in favor of certain nephews and thereby breached the agreement. The wife alleged that she had carried out the oral agreement by turning all her property over to her husband, which he used as his own, and that the husband had violated the agreement in revoking the will on which she

relied and thereby perpetrated a fraud on her. This court held that a cause of action had been stated and that defendants' demurrer to her petition had been erroneously sustained. The evidence to sustain the oral agreement and the part performance to remove the bar of the statute of frauds was not before the court in that case. It was here only on the pleadings. It does not support the position taken by the plaintiff in the present case.

The case of Mack v. Swanson, 140 Neb. 295, 299 N. W. 543, likewise relied on by the plaintiff, involved the violation of a common provision of reciprocal wills, which provision itself evidenced a previous mutual agreement between the husband and wife to make an irrevocable testamentary disposition of their property. The case does not support plaintiff's position as the plaintiff contends.

The judgment of the trial court dismissing plaintiff's petition is correct.

AFFIRMED.

HAROLD A. SAGE ET AL., APPELLEES, V. ORIN D. SHAUL, APPELLANT.

67 N. W. 2d 921

Filed January 7, 1955. No. 33608.

1. **Landlord and Tenant.** One who enters into possession of real estate under an agreement which is for an indefinite and uncertain term, or for so long as the tenant wanted to occupy the premises, becomes a tenant at will.
2. ———. Where no term is mentioned and a tenancy is expressly declared to be at the will of one of the parties, nothing being said as to its binding effect upon the other, it is a tenancy at will of both parties, and either may terminate it at his option.
3. ———. After a notice terminating a tenancy at will, a landlord may serve the statutory notice to quit and institute proceeding in forcible detainer to recover possession of the premises.
4. **Frauds, Statute of.** Equitable considerations will be considered

only as part performance of an oral agreement sufficient to avoid the bar of the statute of frauds. They may not be used to change a tenancy at will to a tenancy from year to year.

APPEAL from the district court for Scotts Bluff County: CLAIBOURNE G. PERRY, JUDGE. *Affirmed.*

W. H. Kirwin, for appellant.

Neighbors & Danielson and *Russell E. Lovell,* for appellees.

Heard before SIMMONS, C. J., CARTER, MESSMORE, YEAGER, CHAPPELL, WENKE, and BOSLAUGH, JJ.

CARTER, J.

This is an action in forcible detainer. At the close of the evidence the trial court directed a verdict for the plaintiffs. Defendant appeals.

In March 1952 one Charles H. Scott was the owner of the farm land involved in this action. He had the land listed for sale. In March of that year the defendant came to his home and attempted to lease the land. Scott told him he was trying to sell the land and did not want to lease it, but arranged to meet defendant at the farm about a week later to further discuss the matter. Scott told the defendant if they could agree on the crops to plant, the landlord's share and so on, he would rent it to defendant as long as defendant was satisfactory and as long as Scott owned the place. Defendant immediately moved some of his machinery and chickens on the place. He gained possession of the farm in early April, although he moved his family on the place at a later date. Scott sold the land to plaintiffs during the latter part of April, although a contract of sale was not entered into until October 3, 1952. No written lease was ever made. Defendant recognized plaintiffs as the owners after the deal was made in April 1952. On October 28, 1952, plaintiffs notified defendant by letter that they wanted possession of the farm on March 1, 1953. A

notice to quit was served on March 2, 1953, and thereafter this litigation was commenced.

The defendant testified that he took possession of the farm on or about March 12, 1952, under an oral agreement providing for the payment of the customary crop shares. He testified that the place was in bad condition and that Scott told him he could stay on the place as long as he wanted to if he would clean it up. There is evidence that defendant hired two men, who assisted him in cleaning up the place which, with the use of defendant's truck, was of the reasonable value of $180. He says he performed work in doing fall irrigating which was reasonably worth $56. The plaintiffs tendered $236 into court for the purpose of removing from the case the issue relating to the cleaning up of the premises. No acceptance of the tender is shown by the record.

Upon the foregoing issues the trial court directed a verdict for the plaintiffs. We will assume, under long-established rules, that the evidence of defendant is true and that, in addition thereto, defendant is entitled to the benefit of every reasonable inference to be drawn from it.

The defendant's version of the oral lease is that if he would go on the place and clean it up, he could stay as long as he desired. The plaintiffs' version is that defendant could rent it as long as he was satisfactory and Scott owned the place. Under either version a tenancy at will was created.

It is fundamental, we think, that when no term is mentioned, and the lease is expressly declared to be at the will of one of the parties, and nothing is said with respect to its binding effect on the other, it is a lease at will of both parties, and either may terminate it at any time. A tenancy that has no definite duration as to one party can have no definite duration as to the other. Cases from other jurisdictions support this view. In Foley v. Gamester, 271 Mass. 55, 170 N. E. 799, a lease

"for as many years as desired" was held to create a tenancy at will. In Shorter v. Shelton, 183 Va. 819, 33 S. E. 2d 643, an oral lease "that she should occupy the room as long as she wanted to" was held to be an estate at will of both parties which either could terminate at his option. Cases of similar import are Barbee v. Lamb, 225 N. C. 211, 34 S. E. 2d 65, and Wildscheutz v. Lee (Tex. Civ. App.), 281 S. W. 1105.

The record shows that defendant was notified by registered mail that plaintiffs demanded possession of the farm on or before March 1, 1953. This had the effect of terminating the tenancy at will as of March 1, 1953, and plaintiffs were entitled to possession on that date. A subsequent serving of a statutory notice to quit is the only condition precedent to the bringing of a forcible detainer action.

The defendant contends that there are equitable considerations which give him rights that he did not otherwise have. There is no merit to this contention. The statute of frauds has no application to the present case. The result would be the same even if the terms of the oral lease were in writing. The tenancy would have been at will in either event. Equitable considerations have been given force in this state where an oral lease for more than 1 year was made. They are treated as part performance and merely remove the lease agreement from the bar of the statute of frauds. Equitable considerations are not available to change the nature of the tenancy created. Consequently they may not be used to change a tenancy at will to a tenancy from year to year. They are available to a party only as part performance to remove the bar of the statute. But in a case where the tenancy is at will even if the agreement was in writing, the statute of frauds can play no part and equitable considerations are therefore ineffective for any purpose.

We conclude therefore that defendant was a tenant

at will under his own evidence and the trial court properly directed a verdict for the plaintiffs.

AFFIRMED.

GEORGE ZABLOUDIL, APPELLANT, V. CHARLES LANE ET AL., APPELLEES.

68 N. W. 2d 193

Filed January 7, 1955. No. 33616.

1. **Appeal and Error.** The transcript of the district court on appeal to the Supreme Court imports absolute verity.
2. ———. In a case where the transcript from the district court on appeal to the Supreme Court shows that a transcript on appeal from the county court to the district court was filed in the district court within the time provided by law for filing and docketing but fails to show docketing within that time, dismissal of the appeal in the district court on that ground is improper.
3. ———. The neglect of the clerk of the district court to docket a case on appeal from the county court where the transcript has been filed within the time provided by law does not defeat the jurisdiction of the district court.

APPEAL from the district court for Valley County: WILLIAM F. SPIKES, JUDGE. *Reversed and remanded with directions.*

John R. Sullivan, for appellant.

Leonard W. Cronk, for appellees.

Heard before SIMMONS, C. J., CARTER, MESSMORE, YEAGER, WENKE, and BOSLAUGH, JJ.

YEAGER, J.

George Zabloudil, plaintiff and appellant, instituted this action in the county court of Valley County, Nebraska, against Charles Lane and Duane Lane, defendants and appellees. The action is one at law for damages. A trial was had at the conclusion of which a judgment was rendered in favor of defendants. The

judgment was rendered on August 24, 1953. The plaintiff, in due time and in sufficient form and substance, executed a bond for appeal from the judgment to the district court. He also procured a transcript which was filed by the clerk of the district court on September 1, 1953. After this filing the defendants filed a motion to dismiss the appeal on the ground that the transcript was not docketed within 30 days as required by section 27-1307, R. R. S. 1943. This motion was sustained and the appeal was dismissed. From the order of dismissal plaintiff has appealed.

The question of whether or not the transcript was filed in time is not in issue. It is conceded that it was filed within 30 days. The only question sought to be presented is, in the terms stated, that of whether or not the failure of the clerk to docket the appeal furnishes the basis for dismissal.

The question however is not here for consideration for the reason that the record discloses on its face that it was docketed. The appeal is here on the transcript alone without a bill of exceptions. The transcript is that of the district court and of course it imports absolute verity. County of Madison v. Walz, 144 Neb. 677, 14 N. W. 2d 319; State ex rel. League of Municipalities v. Loup River P. P. Dist., 158 Neb. 160, 62 N. W. 2d 682. It shows on its face by endorsement of the clerk of the district court that it was filed and docketed on September 1, 1953. The record is the following: "Filed September 1, 1953 - App Docket 16 Page 285 - Leonard B. Woods, Clerk Dist. Court By Wilma D. Kroeger, Deputy."

If it were to be assumed however that the clerk had not docketed the case on appeal still no benefit could flow therefrom to the defendants. In Green v. Hoops, 93 Neb. 571, 141 N. W. 156, it is made clear that the jurisdiction of the district court on appeal is not defeated by failure of a clerk, having received a transcript within time, to docket it. There this court said with reference

to what is now section 27-1304, R. R. S. 1943: "The clerk's duty to docket the appeal was the same as his duty to file the papers. By neglecting his duty and by making a docket entry to that effect, he did not prevent the district court from acquiring jurisdiction."

In that case the clerk received and filed the transcript, as was done here, and made a notation on the record the effect of which was to say that sufficient fees had not been paid and for that reason he refused to docket the case. Responding to this, the court pointed out that there was nothing to show that this fact had been called to the attention of the appellant or that he knew of a purpose on the part of the clerk to refuse to docket the case. Here there was no competent effort to show that failure to docket, if it could in any legal sense be said that there was a failure, depended on any dereliction on the part of the plaintiff. If there was any failure at all it was failure of the clerk to perform his duty, which failure, as already pointed out, could not defeat the right of plaintiff to maintain his appeal.

It must be said therefore that the appeal was improperly dismissed.

The judgment of the district court is reversed and the cause remanded with directions to reinstate the appeal.

REVERSED AND REMANDED WITH DIRECTIONS.

CHAPPELL, J., participating on briefs.

IN RE APPLICATION OF LOUP RIVER PUBLIC POWER DISTRICT. JESSE B. HIGGINS, APPELLANT, V. LOUP RIVER PUBLIC POWER DISTRICT, APPELLEE.

68 N. W. 2d 170

Filed January 7, 1955. No. 33618.

1. **Evidence.** The purpose of the Uniform Business Records as Evidence Act, sections 25-12,108 to 25-12,111, R. S. Supp., 1953, is to permit admission in evidence of systematically entered records without producing evidence of persons who made entries

in the records in the regular course of business at or about the time of the transaction or event recorded, rather than to make a fundamental change in the principles of the shop-book exception to the hearsay rule.

2. ———. The act does not make relevant that which is not relevant nor make all business records competent evidence regardless of by whom made, in what manner, and for what purpose they were compiled or offered.

3. ———. The act is applicable only to records made in the regular course of business and it does not apply to any regular course of conduct which may have some relationship to business.

4. ———. The phrase regular course of business as used in the act must find its meaning in the inherent nature of the business in question and in the methods systematically employed for the conduct of the business as such. If a record is not of such a character as to give it the status of a business entry it is hearsay and is inadmissible.

5. **Trial: Appeal and Error.** The proof in a trial of a jury case must be confined to legal evidence tending to prove or disprove an issue made by the pleadings and the admission of improper evidence is prejudicial if it may have influenced the verdict.

6. **Appeal and Error.** If it does not appear from the record that evidence wrongfully admitted in the trial of a jury case did not affect the result of a trial unfavorably to the party against whom it was admitted its reception must be considered prejudicial error.

7. **Eminent Domain.** If a statute requires that, prior to the institution of condemnation proceedings, attempt to agree with the owner must first be made, such provision is mandatory, and condemnation proceedings are void in case no attempt is made, before beginning them, to come to an agreement with the owner.

8. ———. In order to satisfy statutory requirement of attempt to agree with the owner prior to the institution of condemnation proceedings, there must be a good faith attempt to agree, consisting of an offer made in good faith and a reasonable effort to induce the owner to accept it.

9. ———. A good faith attempt and failure to agree prior to institution of condemnation proceedings must be alleged and proved, and must appear on the face of the record.

APPEAL from the district court for Gage County: CLOYDE B. ELLIS, JUDGE. *Affirmed in part, and in part reversed and remanded with directions.*

Carstens & Pickett, Perry & Perry, and *W. W. Nuernberger,* for appellant.

Walter, Albert & Leininger and *Leslie H. Noble,* for appellee.

Heard before SIMMONS, C. J., CARTER, MESSMORE, YEAGER, WENKE, and BOSLAUGH, JJ.

BOSLAUGH, J.

Appellant is the record owner of land west of and adjacent to the city of Beatrice. He and his wife reside upon and use the land. Appellee is a public corporation engaged in the generation and distribution of electric energy in this state. It instituted these proceedings to acquire by condemnation a perpetual easement across the land of appellant as a right-of-way for the construction, maintenance, and operation of a wood pole H structure X braced 115,000 volt, 3-phase transmission line. The land of appellant is about 232 acres and consists of the south half of the northeast quarter and the southeast quarter of Section 31, Township 4 North, Range 6 East of the 6th P. M. in Gage County, except 7.28 acres near the southeast corner of the north half of the southeast quarter and a small part off the southeast corner of the south half of the southeast quarter. The transmission line extends from the east line of the land a short distance south of the northeast corner of the southeast quarter to the south line thereof a short distance east of the southwest corner of the land. There are 5 two-pole and 1 three-pole structures. The distance between the poles of each structure is about 14½ feet. The clearance and safety features of the line comply with legal requirements. The distance between the structures varies from a minimum of 550 feet to a maximum of 711 feet. The easement affects land on which alfalfa and brome grass were growing at the time it was acquired and an area of timber and pasture land. The timber was cut and all obstructions were removed

from the easement. There was an appeal by appellant from the award of the appraisers in the condemnation proceedings to the district court. This is the second appeal in the case to this court. Higgins v. Loup River Public Power Dist., 157 Neb. 652, 61 N. W. 2d 213. There was a second trial in the district court. The verdict was that appellee did attempt to agree with appellant for an easement across his land, and that appellant was entitled to damages from appellee in the amount stated. The record does not show that a judgment was rendered or entered on the verdict. A motion for dismissal of the proceedings notwithstanding the verdict or in the alternative for a new trial was filed by appellant and it was denied in its entirety and in all of its alternatives. This appeal is from that order.

Condemnation is a special proceeding. The order complained of by appellant affects a substantial right. It is a final order. § 25-1902, R. R. S. 1943; Webber v. City of Scottsbluff, 155 Neb. 48, 50 N. W. 2d 533.

An issue in this case is whether or not appellee did in good faith before the commencement of the condemnation proceedings sufficiently attempt to contact and agree with appellant as to the price or amount of damages appellee should pay him for the easement appellee desired to acquire across the land of appellant upon which to construct, maintain, and operate an electric transmission line. Appellant pleaded that appellee had not made a good faith effort to do so. Appellee denied the assertions of appellant in this regard and alleged that before the commencement of the condemnation it made repeated efforts to contact, to negotiate, and to agree with appellant as to the amount it should pay him for the easement across his land for the use desired, but that appellant avoided appellee and refused it an opportunity to attempt to negotiate with him, and that by his conduct appellant established that any effort of appellee to agree with him on that subject would be futile and that

appellee was excused thereby from making further effort to do so. This was a legitimate and important issue in the case. The burden of proof concerning it was on appellee. Its failure to establish its assertions in reference thereto would be fatal to the case. Higgins v. Loup River Public Power Dist., *supra*. There was offered by appellee, received, read, and exhibited to the jury, over objections of appellant, as evidence to sustain the claim of appellee on this issue a document written and signed by Lusienski, the head of the right-of-way department of appellee who was incapacitated physically and mentally at the time of the trial. Appellant had no part in the making or knowledge of the document. It was made ex parte, dated May 17, 1950, and was found in a file of the department of appellee of which Lusienski had charge on that date. It was his habit to make writings of this nature and place them in the files of the right-of-way department though it does not appear that he was required or requested to do so.

The substance of the document referred to above is that Lusienski went to the home of appellant May 17, 1950, and met his wife at the back door, inquired of her if appellant was home, and was told " 'he was out in the field at work.' " Mrs. Higgins expressed dissatisfaction on account of publicity she and appellant had received in newspapers at Beatrice in connection with the injunction case against them brought by appellee in the district court for Gage County. Lusienski told her he did not know what she was talking about, but if the newspapers had published items about her and her husband they must have received their information from sources other than him and that he had no control over what the newspapers printed. The reply of Mrs. Higgins to Lusienski was " 'you should get better informed before you see Mr. Higgins.' " Lusienski again said he did not know what she was talking about. She then said "this was even a part of the papers that were served

on them by the sheriff." Lusienski then realized that she was making reference to a statement in his affidavit filed in the injunction case to the effect that Mrs. Higgins had told him that " 'her husband would positively not allow anyone on the premises and if anyone should attempt to do so, he would immediately be shot.' " Mrs. Higgins denied she made that statement to Lusienski, and said that the statement was untrue. He insisted that she had made the quoted statement to him three times in a conversation they had November 9, 1949. She then said she had no more time to talk to him and closed the door to the house.

Appellee attempts to justify the writing of May 17, 1950, as relevant and competent evidence by reference to the Uniform Business Records as Evidence Act. §§ 25-12,108 to 25-12,111, R. S. Supp., 1953. Appellee says the act defines "business" as any kind of business, profession, occupation, or operation of institutions. That procurement of right-of-way for contruction of transmission lines by it is a part of its business; that it is an occupation; and that it is a part of the operation of an institution because the district is an institution within the meaning of the act. That the instrument is a record of an act and event made in the regular course of business at or near the time of the act or event recorded, and that its custodian identified it and explained the mode of its preparation. Hence appellee concludes it "was obviously admissible in evidence under the Uniform Act."

The terms of the act are very comprehensive. "A record of an act, condition, or event, shall, insofar as relevant, be competent evidence * * *" if it is identified, "if it was made in the regular course of business" at or about the time of the thing recorded, and if the court is satisfied "the sources of information, method, and time of preparation were such as to justify its admission." § 25-12,109, R. S. Supp., 1953. The act does not make relevant that which is not relevant nor make all business

records competent evidence regardless of by whom, in what manner, and for what purpose they were compiled or offered. The act has the purpose of avoiding the rules of common law regarding the admissibility of business records as evidence and when a writing or record entry is not of such character as to give it the status of a business entry it is relegated to the status of hearsay and is inadmissible under the hearsay rule. Freedman v. Mutual Life Ins. Co,. 342 Pa. 404, 21 A. 2d 81, 135 A. L. R. 1249; Grogan v. Michael, 349 Pa. 369, 37 A. 2d 715; Ingram v. City of Pittsburgh, 346 Pa. 45, 29 A. 2d 32; Hancock v. Crouch (Mo. App.), 267 S. W. 2d 36; Melton v. St. Louis Public Service Co., 363 Mo. 474, 251 S. W. 2d 663.

An Act of Congress provided in substance that in any court of the United States any writing or record made as a memorandum or record of any act, transaction, occurrence, or event should be admissible as evidence thereof if it was the regular course of business to make such memorandum or record at the time of the event recorded or within a reasonable time thereafter. 49 Stat. 1561, c. 640, 28 U. S. C. A. (1940 ed.), § 695. In Palmer v. Hoffman, 318 U. S. 109, 63 S. Ct. 477, 87 L. Ed. 645, 144 A. L. R. 719, the court considered this Act of Congress in connection with an assignment that the trial court erred in excluding a statement in regard to a railroad crossing accident, made by the engineer who died before the trial of an action for damages on account of the alleged negligence of the railroad, and made 2 days after the accident pursuant to an established routine of the railroad company. The court found that the statement satisfied all of the requirements of the act except it was not made in regular course of business. It was observed that the fact that the railroad company made a business of recording its employees' statements of their versions of their accidents did not put those statements in the class of records made in the regular course of the business within the meaning of the act; and that

the phrase regular course of business must find its meaning in the inherent nature of the business in question and in the methods systematically employed for the conduct of the business as a business. In the opinion the court said: "We may assume that if the statement was made 'in the regular course' of business, it would satisfy the other provisions of the Act. But we do not think it was made 'in the regular course' of business within the meaning of the Act. The business of the petitioners is the railroad business. That business like other enterprises entails the keeping of numerous books and records essential to its conduct or useful in its efficient operation. * * * The engineer's statement which was held inadmissible in this case falls into quite a different category. It is not a record made for a systematic conduct of the business as a business. An accident report may affect that business in the sense that it affords information on which the management may act. It is not, however, typical of entries made systematically or as a matter of routine to record events or occurrences, to reflect transactions with others, or to provide internal controls. The conduct of a business commonly entails the payment of tort claims incurred by the negligence of its employees. But the fact that a company makes a business out of recording its employees' versions of their accidents does not put those statements in the class of records made 'in the regular course' of the business within the meaning of the Act. If it did, then any law office in the land could follow the same course, since business as defined in the Act includes the professions. We would then have a real perversion of a rule designed to facilitate admission of records which experience has shown to be quite trustworthy. Any business by installing a regular system for recording and preserving its version of accidents for which it was potentially liable could qualify those reports under the Act. * * * We cannot so completely empty the words of the Act of their historic meaning. If the Act is to be extended to

apply not only to a 'regular course' of a business but also to any 'regular course' of conduct which may have some relationship to business, Congress not this Court must extend it. Such a major change which opens wide the door to avoidance of cross-examination should not be left to implication. * * * In short, it is manifest that in this case those reports are not for the systematic conduct of the enterprise as a railroad business. Unlike payrolls, accounts receivable, accounts payable, bills of lading and the like, these reports are calculated for use essentially in the court, not in the business. Their primary utility is in litigating, not in railroading." See, also, New York Life Ins. Co. v. Taylor, 147 F. 2d 297.

Appellee has not suggested any purpose the writing of Lusienski received in evidence could have served appellee other than the use attempted to be made of it in this litigation. It is difficult to think of any other use that it could have had. The Ohio court in speaking of the Uniform Business Records as Evidence Act in the case of Weis v. Weis, 147 Ohio St. 416, 72 N. E. 2d 245, 169 A. L. R. 668, said: "Of course, if it should appear that such records have been made and kept solely for a self-serving purpose of the party offering them in evidence, it would be the duty of a trial court to refuse to admit them."

The purpose of the act is to permit admission of systematically entered records without the necessity of identifying, locating, and producing as witnesses the individuals who made entries in the records in the regular course of the business rather than to make a fundamental change in the established principles of the shopbook exception to the hearsay rule. New York Life Ins. Co. v. Taylor, *supra;* Ettelson v. Metropolitan Life Ins. Co., 164 F. 2d 660; Clainos v. United States, 163 F. 2d 593; Palmer v. Hoffman, *supra;* Loper v. Morrison, 23 Cal. 2d 600, 145 P. 2d 1; Weis v. Weis, *supra.* In Clainos v. United States, *supra,* the court said: "The Rule contemplates that certain events are regularly recorded as

'routine reflections of the day to day operations of a business' so that 'the character of the records and their earmarks of reliability' import trustworthiness. Thus, the recordation becomes a reliable recitation of the fact. The preparation and maintenance of notations of events outside the operation of the business are not the recordation contemplated."

The document dated May 17, 1950, written by Lusienski and offered by appellee was hearsay and self-serving. It was not admissible as evidence against appellant under any rule of evidence. The objections of appellant to its introduction in evidence should have been sustained. The error in permitting it to become evidence was intensified by the instruction of the court that in deciding whether appellee had made a good faith effort to negotiate with appellant for the easement across his land the jury should take into consideration the words and acts of Mrs. Higgins, wife of appellant. This document is the only disclosure by the record of any words or acts of the wife of appellant. In Borden v. General Ins. Co., 157 Neb. 98, 59 N. W. 2d 141, it is said: "Proof in the trial of a jury case should be confined to legal evidence which tends to prove or disprove the issues made by the pleadings. Evidence erroneously received in such a case may not be considered without prejudice against whom it is admitted if it may have influenced the result as to him. If it does not appear from an examination of the record that the evidence wrongfully received did not affect the result of the trial its reception must be considered prejudicial error." A consideration of the record prevents a conclusion that the jury was not influenced by the improperly admitted writing. There is no way to determine that the jury did not decide this issue against the appellant on the hearsay, incompetent, and self-serving contents of this document. It could be that it did because of the statement therein that Mrs. Higgins had thrice stated that " 'her husband would positively not allow anyone

on the premises and if anyone should attempt to do so, he would immediately be shot.'" The writing was a material part of the matters offered by appellee intended to establish that it had made a good faith effort to negotiate with appellant for the easement.

There was testimony of the following matters intended to sustain a finding that appellee had satisfied the requirements that before it resorted to condemnation it must try in good faith to agree with the owner of the land concerning the rights sought in or over it: The first act towards securing the right-of-way across private property for a new power transmission line is usually to obtain consent of the owner of the property for a survey to determine and locate the route of the line. The location of structures to support it cannot be selected until a survey is made. It is impossible to negotiate for purchase of a right-of-way for such a construction until a survey has been had because only thereby can it be determined where the line will be located; the sites of the structures; what obstructions, such as trees, will have to be removed for safe clearance of the line when constructed; and whether guy wires will be required, and if so how many and the area that will be affected by them.

An employee of appellee, Christensen, a member of the right-of-way department who worked generally in the field, hereafter identified as the employee, on August 29, 1949, went to the farm of appellant for the single purpose of securing permission of the owner to make a survey across the land. He was not authorized to negotiate for a right-of-way and he could not then have made to the owner an offer of any amount for an easement across the land. The employee saw and talked with the appellant at his residence on the land. The employee stated that he was acting for appellee; that it was necessary for it to build a transmission line from Beatrice towards Hebron and extending to Hastings; and he asked appellant if he would "permit us to make

a survey." His answer was that he was not going to have a transmission line on his farm; that there would be no survey thereon; and if he saw surveyors on his land "you will find them there tomorrow."

In the latter part of 1949 the employee and two other men, supplied with surveying equipment, went to the farm of appellant. They did not see or contact appellant or his wife. They saw and talked with the son of appellant. The three men presented themselves as members of a surveying party for appellee. Soon after they arrived at the farm Vasey, a lawyer from Beatrice, came where they were, stated that he represented appellant, and suggested that they have a conference at his office. They went there and were joined by Noble, an attorney for appellee. There was a discussion concerning the survey and it was agreed that appellee could make the desired survey on the land of appellant; that a pending injunction suit to prevent appellant from interfering with appellee making the survey would be dismissed; and that appellee would pay appellant $25 damages caused by the survey and as an incidence of the disposition of the injunction case. These things were done. The survey was made that day. Later the $25 was paid to Vasey and the injunction suit was discontinued.

The employee and Lusienski, the head of the right-of-way department, went to the farm of appellant May 17, 1950. Lusienski and the wife of appellant met and talked. The employee remained in the automobile. He did not hear any conversation between them. Lusienski and the employee did not see appellant on that occasion. They drove on the highway on the east and south of the farm of appellant but they made no other effort to locate him. The employee knew as early as the latter part of 1949, that Vasey represented appellant. He did not know that the relationship between them was altered in any respect before the condemnation proceedings were commenced. The employee was present during

the negotiations successfully conducted by virtue of which permission was secured to make a survey on the land. When he and Lusienski made the trip from Columbus to Beatrice and the farm of appellant May 17, 1950, they made no effort to contact Vasey or to negotiate with or through him for securing the right-of-way by agreement. The employee said that he acted for the right-of-way department in buying right-of-way; and that he knew how to compute and arrive at the amount that should be paid by the district. He was in Beatrice and made payment of the $25 referred to above by check to Vasey on February 15, 1950. He made no effort to negotiate with Vasey at that time concerning the right-of-way across the land of appellant. Neither did he attempt to contact and negotiate with appellant through Vasey. He said nothing about wanting to pay for the easement at that time. Appellee after the survey was completed in August 1949, until the condemnation was commenced in February 1951, did not contact or make reasonable effort to contact appellant or to negotiate with him concerning the payment of a price or damages for the right-of-way upon and across his land. There was no offer of payment made in any manner by appellee to appellant for the easement.

Appellant has owned, lived upon, and farmed the land involved herein located immediately west of the city of Beatrice since 1917. It is a fair inference from the record that it would not have been too difficult to locate and contact him at any time important to this matter. There were ways of satisfying the requirement of attempting to agree before condemnation was available other than personal contact and verbal conversation of the parties. There was no attempt to make use of any of them. It may in this connection be appropriately recalled that the original position of appellee in this matter was that it was not necessary for it to attempt to agree with appellant concerning the easement across his land. It was

maintained by the district that whether it had or had not was not an issuable matter in the litigation and it persisted in this view until its validity was disapproved by this court. The record fails to disclose any disposition of appellee to pay appellant any amount for the burden it desired to place and has placed upon his land. As late as the second trial in the district court all evidence offered by appellee on the issue of damage was that the market value of the land of appellant was exactly the same after the transmission line was constructed as it was before it was built, and that appellant had not thereby been damaged in any amount. This appears to have been a true reflection of the attitude of the appellee throughout this matter. It was able to secure permission to go upon the land and make a survey by negotiation with appellant through his counsel. Likewise the parties were able to resolve a disagreement concerning the entering upon the land of appellant to leave poles and equipment thereon preparatory to construction. There was no like attempt to agree by the same means relative to the easement and compensation for it. The evidence is inadequate to support a finding that the requirement in this regard as stated in the first appeal has been satisfied. In Higgins v. Loup River Public Power Dist., *supra,* it is said: "Where a statute requires that an attempt to agree with the owner shall first be made before the institution of condemnation proceedings to take private lands for public use, such provision is mandatory, and condemnation proceedings instituted without first making a bona fide attempt to agree with the owner are subject to direct attack. * * * The attempt and failure to agree must be alleged and proved, and this must appear on the face of the record."

The denial of the motion of appellant for dismissal of the case should be and it is affirmed. The action of the district court overruling the motion of appellant for a new trial was incorrect and it should be and it is re-

versed, and the cause is remanded to the district court with directions to sustain the motion for a new trial and for further proceedings in harmony with this opinion.

AFFIRMED IN PART, AND IN PART REVERSED AND REMANDED WITH DIRECTIONS.

CHAPPELL, J., participating on briefs.

CALVIN BARD, APPELLANT, V. OSCAR W. HANSON, APPELLEE.
68 N. W. 2d 134

Filed January 14, 1955. No. 33596.

1. **Partnership.** A partnership is a contract by two or more competent persons to place their money, effects, labor, or skill, or some of them, in a lawful trade, profession, or business, and to divide the profit and bear the loss in fixed proportions.
2. **Joint Adventures.** A joint adventure is in the nature of a partnership. It is usually defined as an enterprise undertaken by two or more persons to carry out a single business transaction for profit.
3. **Partnership.** A partner who holds property in his own name which belongs to the partnership will be deemed to hold it in trust for the partnership.
4. ———. The scope of a partnership may be evidenced by written or oral agreement, or implied from the conduct of the parties and what was done by them.

APPEAL from the district court for Douglas County: JAMES M. PATTON, JUDGE. *Reversed and remanded.*

McGinley, Lane, Powers & McGinley and *Grenville P. North,* for appellant.

Frost, Peasinger & Meyers, for appellee.

Heard before SIMMONS, C. J., CARTER, MESSMORE, YEAGER, CHAPPELL, WENKE, and BOSLAUGH, JJ.

CARTER, J.

This is a suit in equity for the dissolution of a partnership and for an accounting of partnership profits. The trial court found that no partnership existed, that

the parties were engaged in a joint adventure, that the purpose of the joint adventure failed, that no accounting was required, and that each had a one-half interest in the net profits, if any, of a certain tract of real estate, and ordered a judicial sale of the real estate on or after November 20, 1953, if a private sale was not consummated before that date. The plaintiff appeals.

The plaintiff, Calvin Bard, was a resident of Tulsa, Oklahoma. He had formerly lived in Omaha where he had been in the theatre and moving-picture business. He returned to Omaha for treatment of his eyes on May 11, 1951. During the period of his treatments he periodically visited "Film Row" to meet his old acquaintances. On one of these visits he met the defendant, Oscar Hanson, whom he had known for 40 years. Defendant had recently sold his film-booking business and it was suggested that the two join forces and attempt to make some money. The object was to make profits from the purchase, sale, resale, leasing, renting, and developing of business sites; such profits to be shared equally. They agreed that in their operations each would pay his own personal expenses except when defendant used his automobile, in which event the car expense was to be taken out of the first profits earned. Many trips were taken to points outside of Omaha in their efforts to make deals involving moving-picture theatres between August 15, 1951, and April 9, 1952, none of which materialized.

The evidence indicates that plaintiff had no money with which to operate, but that he was adept at promoting, buying, selling, and leasing property for persons connected with the film industry. It was his large experience in this field that he was to contribute to their joint efforts. The defendant had some property of his own and some financial ability to contribute to the enterprise. It is clear from the evidence that their activities were to be confined primarily to the film industry

where each had attained experience, although in different fields.

The city of Omaha was about to build a new city auditorium. Several film businesses were located within the area to be taken over by the city for auditorium purposes. The parties talked of buying or leasing properties which might be leased or sold to film industries thus compelled to change locations. The Paramount Film Distributing Company was one of the businesses with which the parties hoped to deal after preliminary negotiations had been had with that company.

The parties needed capital on which to operate. Defendant owned two-thirds of the stock of the Rialto Building Corporation in Beatrice. Plaintiff found a buyer for the Rialto Building Corporation out of which defendant realized $15,000. Plaintiff borrowed $5,000 from the other stockholder of that corporation.

They looked about for a site that was suitable for their purposes. They finally determined that Lot 4, Block 74, Original City of Omaha, was a desirable location. The owner also owned Lot 5 in the same block, and refused to sell unless both lots were purchased. They bought both lots for $65,000. The $15,000 which the defendant realized from the sale of his stock in the Rialto Corporation was used as the cash payment and a mortgage for $50,000 was given back to the owner. The title was taken in defendant's name and defendant and his wife executed the mortgage.

The parties failed to consummate their deal with Paramount Film Distributing Company. They had the lots with no immediate deals in prospect. The defendant began operating a parking lot on the two lots, the proceeds of which he indicated were to be applied to the payment of interest on the $50,000 mortgage. Plaintiff was attempting to effect a sale or development of the property. Defendant sent prospects to plaintiff during this period. Plaintiff contacted about 20 concerns, most

of which but not all were associated with the film industry.

The World Publishing Company became interested in one of the lots. Plaintiff negotiated a sale of one lot for $47,500. This was applied on the $50,000 mortgage. Defendant raised an additional $2,500 which was used to pay off the remainder of the mortgage, plaintiff having obtained a discount from the mortgagee in the amount of the accrued interest.

The parties discussed the lease of the remaining lot for parking purposes. Plaintiff secured a lessee who was to pay $2,500 per year in advance, with the provision that the lease could be cancelled upon 30 days' notice if the lot was sold or if a building was to be erected upon it. The first year's rental was used to pay the $2,500 which defendant had raised to pay off the mortgage on the lots over and above the $47,500.

Plaintiff became short of money and defendant advanced him $150 at this time. Plaintiff also desired to form a corporation to hold title to the property in which each would own 50 percent of the stock and the corporation would give defendant evidence of indebtedness in the amount of $15,000 which he had invested. Defendant procrastinated because of the expense of incorporating. Plaintiff then demanded an accounting of the parking lot operations. Defendant furnished an accounting which was not satisfactory to plaintiff. Defendant then demanded 51 percent of the stock if a corporation be formed, although plaintiff was to have one-half of the profits. Plaintiff declined to incorporate on this basis. A subsequent oral agreement to incorporate is alleged to have been made, and defendant again procrastinated by insisting on consulting his auditor on the "tax angle." The corporation was never formed. Defendant claimed to be the sole owner of the lot, and this suit was brought.

It is the contention of the plaintiff that a partnership existed between himself and the defendant. A partner-

ship is a contract by two or more competent persons to place their money, effects, labor, or skill, or some of them, in a lawful trade or business, and to divide the profit and bear the loss in certain proportions. Baum v. McBride, 143 Neb. 629, 10 N. W. 2d 477. A joint adventure is in the nature of a partnership. To constitute a joint adventure there must be an agreement to enter into an undertaking in the objects and purposes of which the parties have a common interest, and each of the parties must have equal voice in the manner of its performance and control over the agencies used therein, though one party may entrust performance to another. Soulek v. City of Omaha, 140 Neb. 151, 299 N. W. 368. A joint adventure is usually defined as an enterprise undertaken by two or more persons to carry out a single business transaction for profit. Alexander v. Turner, 139 Neb. 364, 297 N. W. 589. The principal distinction between a partnership and a joint adventure is that the latter usually relates to a single transaction. Soulek v. City of Omaha, *supra.*

We think that the parties intended to create a partnership. The sharing of the profits was agreed upon and the sharing of expenses and losses was contemplated. The operations of the parties was to cover any and all opportunities to make money, although they contemplated dealing with businesses associated with the film industry because that is where the parties had had experience. The parties were joint principals. The partnership was for their mutual benefit in the pursuit of which each had an equal voice in the manner of its performance. The purpose of the enterprise was not to consummate a single transaction but was to complete any or all deals which presented themselves upon which they could make a profit. The description of their operations, hereinbefore set forth, indicates by its scope that a partnership rather than a joint adventure was created. The scope of a partnership may be evidenced by written or oral agreement, or implied from the conduct of

the parties and what was done by them. Smith v. Smith, 179 Iowa 1365, 160 N. W. 756; 68 C. J. S., Partnership, § 78, p. 518. The question is not a controlling one in the present case for the reason that the same rules apply whether or not it be a partnership or joint adventure. Alexander v. Turner, *supra.*

The plaintiff contends that the agreement, which was made in 1951, had been in existence continuously for more than 18 months; that both spent their time in attempting to buy suitable property for development, sale, or lease; and that the purchase of the lots here involved, the operation of the parking lot, the sale of one lot, and the lease of the remaining lot, all fell within the framework of the agreement made by the parties. The defendant, on the other hand, asserts that the objects and purposes of the oral agreement were limited only to the making of profits from the development of property for sale or lease to persons or businesses associated with the film industry, and that such negotiations having failed with this restricted class of businesses, there was no profit to share under the limited agreement made.

The evidence of the two principals to the agreement is very conflicting. We are convinced, however, that the conduct and actions of the two parties speak louder, and are entitled to more credence, than their words.

It is clear from the record that the defendant knew the plaintiff had no money to invest in the partnership when the agreement was made. Defendant knew that plaintiff was adept in dealing in theatres and business places associated with the film industry. Plaintiff sold the Rialto Theatre at Beatrice for the defendant and the other stockholder. The evidence indicates that this was done not to gain a commission from the sale for the plaintiff but to secure cash to further the partnership interest. They made numerous automobile trips outside of Omaha in an attempt to make deals to their advantage. The mileage costs were paid by defendant but charged to the partnership business, pursuant to the agreement. The

two lots in question were purchased for the purpose of erecting a building thereon for sale or lease to Paramount Film Distributing Company. The plaintiff spent much time trying to make this deal with the Paramount Film Distributing Company without success. The evidence is clear that the two lots were purchased as a part of the business and the purchase was within the terms of the agreement creating that relationship as each understood it to be. The defendant contends, however, that when the parties failed to find a purchaser associated with the film industry, particularly with the Paramount Film Distributing Company, but found a purchaser not so associated, the transaction ceased to be a part of the partnership under the limiting words of the partnership agreement.

We point out that the parties had contemplated incorporating their enterprise and that the title to the two lots was taken in the name of the defendant as a matter of convenience only. After the contemplated deal with the Paramount Film Distributing Company had failed to materialize, defendant continued to send prospective purchasers to the plaintiff whether or not they were associated with the film industry. In fact, the World Publishing Company, the eventual purchaser of one of the lots, was directed by the defendant to negotiate with the plaintiff for the lot. Before the sale of the one lot defendant operated a parking lot thereon while plaintiff tried to make a deal to sell or lease the two lots. Defendant stated that the income from the lots would be applied upon the interest on the $50,000 mortgage. After the sale of the one lot he continued to operate a parking lot on the other until it was leased for $2,500 per year. Plaintiff demanded an accounting of the earnings of the parking lot. Defendant purported to account in writing, the written account appearing in the record. This account credited the defendant with $146.75 mileage expense incurred during the period the parties were working together. It had been agreed that such ex-

pense should be paid from the first money earned in any deal they made. The expenses of placing the lots in condition for use as a parking lot were credited to the defendant. The daily income from the lot was set forth. Credits were taken for interest on the $15,000 and the $2,500 advanced by the defendant. This accounting was made even though defendant was not obliged to account at all if the defendant's version of the agreement was the correct one. The subsequent lease of the lot for an annual rental of $2,500 was negotiated by the plaintiff. The terms of the lease were such that it could be terminated in the event of a bona fide sale of the lot, or if a building was to be erected thereon. In other words, the lease provisions left the way open for a deal within defendant's version of the agreement.

The evidence sustains the position of the plaintiff. The conduct and actions of the defendant were consistent with plaintiff's contentions and inconsistent with the position he now assumes. If there is any question about the understanding of the parties in making the agreement, the defendant has resolved it by his own actions and conduct. He is in no position to defeat the rights of the plaintiff because he holds legal title to the remaining lot as a matter of convenience. Baum v. McBride, 152 Neb. 152, 40 N. W. 2d 649. His attempt to put the strict and limited meaning on the partnership agreement is directly contrary to the interpretation he put upon it when gauged by his own conduct under it.

The evidence of the defendant was not direct and positive. In many of his answers he stated that he would have to give thought, study, and consideration as to the exact meaning of the agreement he made with the plaintiff. The evasiveness of some of his answers and the nebulous character of his claimed rights are in direct conflict with the interpretation he placed upon the agreement by his own conduct before the potential profit in the remaining lot manifested itself. We necessarily find for the plaintiff on the evidence in the record.

We find that defendant holds the title to Lot 4, Block 74, Original City of Omaha, for and on behalf of the partnership. We further find that the income from the parking lot operations belongs to the partnership. We also find that plaintiff is entitled to a dissolution of the partnership and to an accounting of all the profits of the partnership. The decree of the district court is reversed and the cause remanded for further proceedings in accordance with this opinion.

REVERSED AND REMANDED.

BENITO GARCIA, PLAINTIFF IN ERROR, V. STATE OF NEBRASKA, DEFENDANT IN ERROR.

68 N. W. 2d 151

Filed January 14, 1955. No. 33612.

1. **Homicide.** Homicide committed in the perpetration of a robbery is murder in the first degree, and in such a case the turpitude of the act supplies the element of deliberate and premeditated malice.
2. **Criminal Law.** Whoever aids, abets, or procures another to commit any offense may be prosecuted and punished as if he were the principal offender. § 28-201, R. R. S. 1943.
3. **Criminal Law: Evidence.** Where a defendant in a criminal case testifies in his own behalf he is subject to the same rules of cross-examination as any other witness and may be required to testify on his cross-examination as to any matters brought out or suggested by him on his direct examination, and ordinarily he cannot avail himself of the objection that the evidence may incriminate him.
4. **Evidence: Appeal and Error.** The scope of the cross-examination of a witness rests largely in the discretion of the trial court, and its ruling will be upheld, unless an abuse of that discretion is shown.
5. **Criminal Law: Evidence.** The testimony of a witness as to a statement made by another person is hearsay when he understood it, not as originally given, but as translated by an interpreter not then under oath.
6. ———: ———. It is proper to admit evidence in respect to the conduct of an accused person while in jail awaiting trial.
7. **Homicide.** If a killing is committed within the res gestae of

the felony charged it is committed in the perpetration of, or attempt to perpetrate, the felony, within the meaning of the statute.

8. **Criminal Law.** The term "res gestae" means things done in and about, and as a part of, the transaction out of which the litigation in hand grew and on which transaction said litigation is based.

9. **Criminal Law: Evidence.** A conviction may rest on the uncorroborated evidence of an accomplice when, considered with all the testimony and circumstances, it satisfies the jury beyond a reasonable doubt of the guilt of the accused.

10. ———: ———. The evidence of an accomplice should be closely scrutinized. If it appears that such witness has willfully sworn falsely in regard to a material matter upon the trial, his evidence cannot be sufficient, if uncorroborated, to support a verdict of guilty.

11. **Criminal Law: Trial.** The credibility of the witnesses and the weight of their testimony is for the jury to decide.

12. **Homicide: Indictments and Informations.** An information charging defendant with a homicide committed in the perpetration of or attempt to perpetrate a robbery under section 28-401, R. R. S. 1943, charges only murder in the first degree, and it is error for the trial court to instruct the jury that thereunder they may find defendant guilty of murder in the first degree, guilty of murder in the second degree, or guilty of manslaughter.

13. **Criminal Law: Trial.** The mere fact that a witness in a criminal prosecution is a regular public law enforcement officer does not entitle an accused to an instruction that the jury, in weighing his testimony, should exercise greater care than in weighing the testimony of other witnesses.

14. ———: ———. Where informers, detectives, or other persons employed to hunt up testimony against the accused are called to testify against him, he is entitled to an instruction to the jury that in weighing their testimony greater care should be exercised than in the case of witnesses who are wholly disinterested.

15. ———: ———. Trial judges and public prosecutors are charged with the duty of conducting criminal trials in such a manner that the accused may have a fair and impartial trial, uninfluenced by prejudice, passion, and public clamor.

16. ———: ———. Prosecutors are not partisans against the accused, and should handle all prosecutions without bias or prejudice as between the public and the defendant.

17. ———: ———. It is the duty of the prosecuting attorney to conduct the trial in such a manner as will be fair and impartial to the rights of the accused, no matter how guilty, in his opinion,

defendant may be; and this rule applies to special counsel assisting the prosecuting attorney.

18. **Witnesses: Oaths and Affirmations.** One who, by reason of insanity or imbecility, is unable to comprehend the obligation of an oath, or to understand and intelligently answer the questions put by the court upon a voir dire examination, is, under the provisions of section 25-1201, R. R. S. 1943, incompetent to testify as a witness.

19. **Witnesses: Trial.** The question of competency of a person to be a witness must be left to the sound legal discretion of the trial judge, leaving to the jury to determine the credit that ought to be given to the testimony.

ERROR to the district court for Sioux County: EARL L. MEYER, JUDGE. *Affirmed.*

Charles A. Fisher, for plaintiff in error.

Clarence S. Beck, Attorney General, and *Robert A. Nelson,* for defendant in error.

Heard before SIMMONS, C. J., CARTER, MESSMORE, YEAGER, WENKE, and BOSLAUGH, JJ.

WENKE, J.

This is an error proceeding from the district court for Sioux County. A jury therein found Benito Garcia, petitioner in error and defendant below, guilty of murder in the first degree and fixed the penalty at life imprisonment in the penitentiary. The trial court imposed sentence accordingly and, from the overruling of his motion for a new trial, defendant brought this proceeding. We shall herein refer to Garcia as defendant.

The information filed by the State charged that on July 18, 1953, defendant committed murder in the first degree by killing Edwardo Zamora while in the act of robbing him. The charge was made under and pursuant to the provisions of section 28-401, R. R. S. 1943.

Defendant contends the evidence produced was not sufficient to prove his guilt beyond a reasonable doubt. We think, from the evidence adduced, the jury could find, beyond any reasonable doubt, that during the afternoon of July 18, 1953, the deceased, defendant, and one

Salvador Martinez Gutierez left Morrill, Nebraska, in the deceased's car; that they drove to an irrigation ditch in Sioux County for the purpose of taking a bath in the waters of the ditch; that while pretending to prepare to take his bath the defendant seized the deceased; that while the deceased was being held by defendant, Gutierez robbed him of his wallet, or pocketbook, and his automobile keys; that after robbing him defendant beat the deceased about the head, first with a board and later with a length of two-by-four; that such beatings caused severe contusions or bruises about the head, a fracture of the skull at its base, and injury to the brain; that such beatings resulted in the deceased becoming unconscious; that the deceased, while in this unconscious condition, was thrown into the waters of the irrigation ditch; and that because of his unconscious condition he drowned.

As stated in Pumphrey v. State, 84 Neb. 636, 122 N. W. 19, 23 L. R. A. N. S. 1023: "Homicide committed in the perpetration of a robbery is murder in the first degree, and in such a case the turpitude of the act supplies the element of deliberate and premeditated malice."

Both defendant and Gutierez admitted the robbery but each accuses the other of actually doing the acts which resulted in Zamora's death. But this gives neither any relief for each is, under such circumstances, responsible for the acts of the other. Section 28-201, R. R. S. 1943, provides: "Whoever aids, abets or procures another to commit any offense may be prosecuted and punished as if he were the principal offender."

Besides questioning the sufficiency of the evidence adduced, which contention we find to be without merit, defendant contends many errors occurred during the course of the trial which were prejudicial to his rights and prevented him from having a fair trial.

Defendant contends that the trial court erred in the admission of certain evidence after proper objections thereto had been made. The first of these relates to

certain questions asked of and answered by defendant relating to when he had been in jail in Laredo, Texas. On redirect, in reference to a statement he had given while in jail and which was in evidence, defendant's counsel asked him, "Now, when you were in jail there all the time, the very fact that you were in jail made you afraid, did it not?" He replied, "Yes, sir." Thereafter, on recross, defendant was asked, "Well, you have been in jail, off and on, in Laredo, Texas since you were 17 up to 1951 at least nine times?" He replied, "The last time I was in jail was about three years ago." He then was asked the following questions: "Q. So you are not afraid of jails, are you? A. Yes, sir; I am afraid of them. Q. Do you mean to say that being in jail makes you afraid? * * * A. No, sir; * * *."

There had also been a question raised as to defendant's age. He testified he was 29 at the time whereas in his statement taken on August 5, 1953, he stated he was 27. This was apparently done for the purpose of affecting the credibility of Julian W. Lopez, who acted as interpreter in taking defendant's statement, and to thereby discredit his signed confession. Defendant did not understand or speak the English language with any degree of fluency and an interpreter was necessary to converse with him. In that respect the following questions were asked on cross-examination of defendant and he replied thereto as herein set forth: "Q. All right. Now, I am going to ask you again if you had a conversation with the Chief of Detective in Laredo, Texas on March 5, 1951, and if at that time you did not tell him that you were 25 years of age? * * * A. I don't remember because that is about three years ago. Q. All right. Did you have a conversation with the Chief of Police of Laredo on June 20, 1943 at his office in which you talked about your age? * * * A. I don't remember. * * * Q. I will ask you if on that date, June 20, 1943, you told the Chief of Police of Laredo, Texas, in his office that you were 17 years of age. * * * A. I don't remember."

There were other questions of a like character.

Section 25-1214, R. R. S. 1943, provides: "A witness may be interrogated as to his previous conviction for a felony, but no other proof of such conviction is competent except the record thereof."

As stated in Leo v. State, 63 Neb. 723, 89 N. W. 303: "The scope and effect of this section is to allow the witness to be interrogated as to whether he has before been convicted of a felony, calling his attention thereto, so that he may make admission thereof, or the introduction of the record of such conviction in evidence."

And in Daggett v. State, 114 Neb. 238, 206 N. W. 735, we said: "'It has been frequently held by this court that a witness may not be interrogated as to his previous conviction of a crime below the grade of a felony.' Ford v. State, 106 Neb. 439." See, also, Y.M.C.A. of Lincoln v. Rawlings, 60 Neb. 377, 83 N. W. 175; Dunlap v. State, 116 Neb. 313, 217 N. W. 89; Crawford v. State, 116 Neb. 629, 218 N. W. 421.

But nowhere in the record can we find any question asking about defendant's having been previously convicted of a felony or of a crime below that grade; namely, a misdemeanor.

It is also improper for a prosecutor to state that the defendant in a criminal prosecution has committed or been charged with committing some other crime. In Balis v. State, 137 Neb. 835, 291 N. W. 477, we said: "Such remarks are so inflammatory and prejudicial to the rights of the accused that the efficient effort of the trial court to overcome it by instructions to the jury to disregard it is without avail." See, also, Leo v. State, *supra;* Elliott v. State, 34 Neb. 48, 51 N. W. 315; Wehenkel v. State, 116 Neb. 493, 218 N. W. 137.

We find nothing in the record to show that either the county attorney or the special prosecutor authorized by the court violated this principle.

The only thing that can be said of the questions asked is that inferentially they indicate defendant was prob-

ably charged with some offense or otherwise he would not have been in jail.

The rule is that one charged with a crime, who becomes a witness in his own behalf upon his trial, is subject to the same rules that govern other witnesses upon cross-examination and may, on cross-examination, be interrogated as to matters brought out on direct examination. See, Crawford v. State, *supra;* 3 Wharton's Criminal Evidence (11th ed.), § 1303, p. 2174; 3 Jones, Evidence (4th ed.), § 821, p. 1519.

In this respect we have said: "Where a defendant in a criminal case testifies in his own behalf, he is subject to the same rules of cross-examination as any other witness, and may be required to testify on his cross-examination as to any matters brought out or suggested by him on his direct examination, and ordinarily he cannot avail himself of the objection that the evidence may incriminate him." Poston v. State, 83 Neb. 240, 119 N. W. 520.

And in Peterson v. State, 63 Neb. 251, 88 N. W. 549, we said: "The scope of the cross-examination of a witness rests largely in the trial court, and its ruling will be upheld, unless an abuse of discretion is shown." See, also, Griffith v. State, 157 Neb. 448, 59 N. W. 2d 701.

We think the questions asked by the State sufficiently related to matters brought out by counsel for defendant on his direct and redirect examination of defendant that they were entirely proper.

To clarify for the jury the purpose for which this evidence was admitted, the court gave instruction No. 12, which is as follows:

"The defendant said in effect, that he was scared from being in jail. Because of this evidence it was proper for the State to cross-examine the defendant on this subject in relation to any previous experience. If the defendant was in jail previously, is of itself absolutely immaterial in this case and no unfavorable inference can be drawn by you as against this defendant by

any such implication from the questions asked or any answers. The only purpose of this evidence is to assist you in determining if the defendant was scared from being in jail. You must give it no other consideration or meaning, and you should ignore it entirely unless it does assist you in that regard.

"There was also some cross-examination of the defendant as to his age and statements made by him as to his age to law enforcement officers. No implication can be drawn by you as against this defendant from the fact that the questions referred to law enforcement officers. The only purpose for which such reference was permitted, was to fix the time and place of the claimed statements with reference to defendant's age."

This instruction properly and correctly informed the jury of the limited purpose for which this evidence was received. The court was not in error in doing so. It fully and fairly protected defendant's rights.

In this regard we have not overlooked the following questions asked by the State in cross-examining the defendant and the answers he gave thereto: "Q. On March 5, 1952, did you have a conversation with the Chief of Detectives in the detectives bureau in Laredo, Texas? * * * A. I was locked up three months because I could not pay the money they asked me. * * * Q. The question is, did you ever have a conversation or a talk with the Chief of Detectives on that day? * * * A. No, sir; they lock me in."

The answer to the first question was stricken as not being responsive thereto and the same is true of the answer to the second question except the words, "No, sir." These rulings were correct in view of what we have already said. The questions related to foundation. They were for the purpose of finding out if a conversation had taken place on that day between defendant and the chief of detectives in Laredo, Texas. The questions were entirely proper and we find nothing wrong in their being asked. Merely because defendant made irrespon-

sive answers thereto did not make them erroneous.

Defendant further contends that it was error to permit Steven Warrick, sheriff of Scotts Bluff County, to testify to conversations he had with the defendant and Gutierez through an interpreter. Neither defendant nor Gutierez was able to read or write the English language nor could either understand or speak it with any degree of fluency. Consequently it was necessary for the sheriff to converse with them by means of an interpreter. The sheriff used Julian W. Lopez for this purpose. The claim is that such conversations were hearsay and therefore inadmissible.

We think the correct rule is that the testimony of a witness as to a statement made by another person is hearsay when he understood it, not as originally given, but as translated by an interpreter not then under oath. See, 22 C. J. S., Criminal Law, § 720, p. 1232; 16 C. J., Criminal Law, § 1235, p. 624; Indian Fred v. State, 36 Ariz. 48, 282 P. 930.

As stated in State v. Terline, 23 R. I. 530, 51 A. 204, 91 Am. S. R. 650: "While it is true that the interpretation of the words of a witness testifying in a foreign language by one who is sworn in court and translates the testimony to the tribunal is not obnoxious to the hearsay rule, because both the original witness and the interpreter are under oath and subject to cross-examination, yet where a witness is offered to testify to the statements of another person spoken in a language not understood by him but translated for him by an interpreter, such witness is not qualified, because he does not speak from personal knowledge."

The record discloses that the court sustained objections made on this basis and the witness was permitted to testify only with reference to such answers as were given in English or where answers were made by signs or actions. We think the trial court was correct in doing so. It should here be stated that the first few objections made on this basis were overruled and the wit-

ness was permitted to answer. The trial court, as to these rulings, was in error but since the answers related to immaterial matters no prejudice resulted therefrom.

Defendant further contends the trial court erred in rejecting certain evidence. This contention relates primarily to the trial court's exclusion of evidence offered by defendant to show that while Gutierez was being held in jail at Chadron he did, about 2 a. m. on October 8, 1953, commit an assault upon another person then confined therein by hitting him over the head with a piece of wood he had broken off a chair. The name of the other person is Emil Comes Last. It should here be stated Gutierez had been charged with the same offense as the defendant and at the time the foregoing occurred he was being held in jail at Chadron awaiting trial on this charge.

Defendant, as a basis for this contention, apparently relies on the principle stated in Bartlett v. State, 115 Neb. 148, 211 N. W. 994, that: "* * * it is proper to admit evidence in respect of the conduct of an accused person while in jail awaiting trial. King v. State, 108 Neb. 428. See, also, 16 C. J. 554, sec. 1071; State v. Clark, 166 Ia. 123." See, also, 22 C. J. S., Criminal Law, §§ 629, 631, p. 965.

This type of evidence would be, under circumstances such as here, admissible against an accused whose guilt or innocence is in issue in a trial. It would be admissible in the trial of Gutierez if offered by the state. We are unable to find any authority that it may be admitted against a witness in the case even though an accomplice. Insofar as the trial herein involved is concerned it related to a collateral matter and the court properly excluded it.

Defendant also complains of the fact that the trial court refused to let him show his counsel, because of his poverty, was appointed by the court. We think the trial court was correct in doing so for the manner in which defendant obtains counsel is not material to the issue of

his guilt or innocence as long as he is properly represented.

Defendant complains of several instructions given by the court. He complains of the use of the word "casual" in instruction No. 6, claiming it should have been "causal." This instruction is as follows: "You are instructed that in order to establish that a homicide was committed in the perpetration of a robbery it is not necessary for the State to prove that the homicide was committed before or during the actual robbing from the person killed; a homicide is committed in the perpetration of robbery if it is committed in the Res Gestae of the robbery; that is, if the initial crime of robbery and homicide were closely connected in point of time, place and *casual* relation, and were parts of one continuous transaction. It is for the jury to determine from the facts and circumstances in evidence: if these, and all the other essential elements in the case exist, and the same must be established by the State beyond a reasonable doubt." (Emphasis ours.)

Section 28-401, R. R. S. 1943, under and pursuant to which the charge was here made, provides: "Whoever shall purposely and of deliberate and premeditated malice or in the perpetration of or attempt to perpetrate any rape, arson, robbery or burglary, or by administering poison, or causing the same to be done, kill another; or, whoever by willful and corrupt perjury or subornation of the same, shall purposely procure the conviction and execution of any innocent person, every person so offending shall be deemed guilty of murder in the first degree, and upon conviction thereof shall suffer death or shall be imprisoned in the penitentiary during life, in the discretion of the jury."

In MacAvoy v. State, 144 Neb. 827, 15 N. W. 2d 45, we said: "The defendant urges, however, that the killing occurred after the act of sexual intercourse took place and, consequently, it was not a killing in the perpetration of a rape. There is no merit in this argument.

If a killing is committed within the res gestae of the felony charged it is committed in the perpetration of, or attempt to perpetrate, the felony, within the meaning of the statute." See, also, Francis v. State, 104 Neb. 5, 175 N. W. 675.

In Collins v. State, 46 Neb. 37, 64 N. W. 432, we defined res gestae as: "The term 'res gestae' means things done in and about, and as a part of, the transaction out of which the litigation in hand grew and on which transaction said litigation is based."

And in Sullivan v. State, 58 Neb. 796, 79 N. W. 721, we held: "A declaration may be a part of the res gestae without being precisely coincident with the main transaction. It is sufficient that there was between the two an immediate casual relation, and that the statement was a spontaneous characterization of the act."

We find the instruction comes within the holdings of this court. We do not think the act done necessarily needs to be the cause of the death. It is sufficient if death occurs unexpectedly and without design if it occurs while the party or parties charged are in the perpetration of, or an attempt to perpetrate, one of the acts set out in the statute.

Defendant also complains of the court's instruction No. 13, contending his requested instruction No. 12 should have been given. The court's instruction No. 13 is, for all intents and purposes, the same as defendant's requested instructions Nos. 2 and 3. Instruction No. 13 is as follows: "An accomplice is one culpably implicated in the commission of the crime with which a defendant is charged. By his own testimony, Salvador Martinez Gutierez is an accomplice in this case. While it is a rule of law that a person accused of a crime may be convicted upon the testimony of an accomplice, still, a jury should always act upon such testimony with great care and caution, and subject it to careful examination, and scrutiny, in the light of all the circumstances and all the other evidence in the case, and the jury ought not

to convict upon the testimony of an accomplice alone unless after a careful examination of such testimony, they are satisfied beyond a reasonable doubt of its truth and that they can safely rely upon it, but if after careful consideration, and scrutiny, and all the circumstances, such testimony, together with the other evidence in the case, satisfies the jury of the defendant's guilt, beyond a reasonable doubt, then the jury should so find and return in their verdict."

The rule is: "A conviction may rest on the uncorroborated evidence of an accomplice when, considered with all the testimony and circumstances, it satisfies the jury beyond a reasonable doubt of the guilt of the accused." Ruzicka v. State, 137 Neb. 473, 289 N. W. 852.

We have also said: "The evidence of an accomplice should be closely scrutinized. If it appears that such witness has willfully sworn falsely in regard to a material matter upon the trial, his evidence can not be sufficient, if uncorroborated, to support a verdict of guilty." Jahnke v. State, on rehearing, 68 Neb. 181, 104 N. W. 154.

Defendant's tendered instruction is drafted on the principle stated in Jahnke v. State, *supra*. We think, under the factual situation presented, the instruction given by the court was correct.

Defendant complains of instruction No. 10 given by the court. Instructions Nos. 10 and 11 given by the court deal with the same subject; that is, statements or admissions made by the defendant and advises the jury when such statements may be considered by them and, if to be considered, how they are to be considered. Admittedly instruction No. 11 correctly does so but defendant contends No. 10 does not. The only error complained of in No. 10 is that it does not put in proper sequence the jury's duty in this regard; that is, it must first determine whether the statement or admission was, in fact, voluntary and then, if it determines it was voluntary, whether the statement or admission correctly

reflected what the defendant said or meant and, if so, the credence and weight it deems it is entitled to be given. Although it would have been better to have given only instruction No. 11 in advising the jury as to how to consider the admissions or statements of defendant, as it included everything covered by No. 10, we do not think the jury could possibly have been mislead thereby as instruction No. 10 deals with only a part of the subject which is fully covered by instruction No. 11.

We think the following have particular application to the foregoing situation:

"Where the charge to the jury, considered as a whole, correctly states the law, the verdict will not be reversed merely because a single instruction, when considered separately, is incomplete." Kirkendall v. State, 152 Neb. 691, 42 N. W. 2d 374.

"Where instructions, considered as a whole, state the law fully and correctly, error will not be predicated thereon merely because a separate instruction, considered by itself, might be subject to criticism." Fullerton v. State, 148 Neb. 811, 29 N. W. 2d 618.

Defendant also complains of instruction No. 14 given by the court. This instruction advised the jury as follows: "You are instructed by the court that *you are the sole judges of the credibility of the evidence and every part thereof and of the weight to be given to the same.* In determining the value of the testimony of the witnesses you should take into consideration their interest, if any, in the result of the suit; their conduct while testifying; their apparent fairness or unfairness; their opportunities for seeing or knowing the things about which they testify; the reasonableness or unreasonableness of the statements made by them; and all the facts and circumstances proved at the trial tending to corroborate or contradict such testimony.

"Where there is a conflict of testimony it is for you to say who are the more worthy of belief. You are not

bound to take the testimony of any witness, or any evidence, as absolutely true, and you should not do so if you are satisfied from the facts and circumstances proved in the trial that such witness is mistaken in a matter testified to by the witness, or that, for any other reason, the testimony of such witness, or such evidence, is untrue or unreliable." (Emphasis ours.)

The complaint relates to that part which we have emphasized. Defendant contends it should have read: You are the sole judges of the credibility of the witnesses and the weight to be given their testimony.

We think the defendant is correct for as we said in Fisher v. State, 154 Neb. 166, 47 N. W. 2d 349: "The credibility of the witnesses and the weight of their testimony was for the jury to decide, * * *."

As stated in Chezem v. State, 56 Neb. 496, 76 N. W. 1056: "Unquestionably jurors are to determine for themselves the credit to be given witnesses, and the weight to be accorded their testimony."

Other than the sentence referred to we think the instruction as a whole correctly stated the law and we do not think the jury could possibly have misunderstood its duty in this regard. The following principles have application to a situation such as this:

"Whether an instruction to the jury is a correct statement of law applicable to the issues must be determined from an examination of the whole charge to the jury, and not from an isolated sentence in a single instruction." Browne v. State, 115 Neb. 225, 212 N. W. 426.

"Where instructions, considered as a whole, state the law fully and correctly, error will not be predicated therein merely because a separate instruction, considered by itself, might be subject to criticism." Kirkendall v. State, *supra.*

"Instructions should be considered together in order that they may be properly understood, and when, as an entire charge, they properly submit the issues to the jury, the verdict will not be set aside for harmless

error in one of them." Blanchard v. Lawson, 148 Neb. 299, 27 N. W. 2d 217.

By his requested instructions Nos. 5 and 9 defendant asked the court to submit the lesser offenses of manslaughter, assault and battery, and assault. This the trial court refused to do. Defendant complains of this refusal as follows: "However we do state that wherever an information as here charged the specific assault and battery by specific means, that even though it charged murder in the perpetration of a robbery by charging the specific means, that is by striking and beating with a club, by pushing in the water, that that was such a specific charge of a lesser crime that it should have been instructed upon, and that whereas in the present case the information so charged and the proofs so corresponds with that, that it was error not to instruct on the lesser degrees of murder in the second degree, manslaughter and assault and battery. All of these were requested by the defendant and the court failed to give them."

We said in Pumphrey v. State, *supra*: "Homicide committed in the perpetration of a robbery is murder in the first degree, and in such a case the turpitude of the act supplies the element of deliberate and premeditated malice." See, also, Swartz v. State, 118 Neb. 591, 225 N. W. 766; Morgan v. State, 51 Neb. 672, 71 N. W. 788.

And, in a situation such as here, we held in Thompson v. State, 106 Neb. 395, 184 N. W. 68: "An information charging defendant with a homicide committed in the perpetration of or attempt to perpetrate a robbery, under section 8581, Rev. St. 1913 (now section 28-401, R. R. S. 1943), charges only murder in the first degree, and it is error for the trial court to instruct the jury that they may find defendant guilty of murder in the first degree, guilty of murder in the second degree, or guilty of manslaughter." See, also, Morgan v. State, *supra;* Davis v. State, 116 Neb. 90, 215 N. W. 785.

Defendant also complains of the court's failure or

refusal to give several instructions that he requested. The first of these deal with requested instructions Nos. 8 and 10. They are cautionary instructions relating to the testimony of law enforcement officers and witnesses employed by the State.

As to the witness Steven Warrick, sheriff of Scotts Bluff County, the rule is as follows: The mere fact that a witness in a criminal prosecution is a regular public law enforcement officer does not entitle an accused to an instruction that the jury, in weighing his testimony, should exercise greater care than in weighing the testimony of other witnesses. See, Fisher v. State, 154 Neb. 166, 47 N. W. 2d 349; Koch v. State, 130 Neb. 119, 264 N. W. 172.

But defendant contends Lopez was an informer, investigator, and undercover man who was hired and paid to look up testimony and testify against the defendant. Under these circumstances he contends the following has application: "Where informers, detectives, or other persons employed to hunt up testimony against the accused, are called to testify against him, he is entitled to an instruction to the jury that in weighing their testimony greater care should be exercised than in the case of witnesses who are wholly disinterested." Sandage v. State, 61 Neb. 240, 85 N. W. 35, 87 Am. S. R. 457.

There is absolutely nothing in the record to support this claim of the defendant. The record is clear that the only work performed by Lopez for the sheriff was that of an interpreter and that he was hired and paid solely for such services. Under the facts of the case the court properly refused to give these instructions.

We think defendant's requested instructions Nos. 7 and 11 were substantially covered by instructions given. In this situation the following principle has application: "When instructions requested are substantially given in the charge prepared by the court on its own motion it is not error to refuse to repeat them though expressed in language different from that used by the court."

Fimple v. Archer Ballroom Co., 150 Neb. 681, 35 N. W. 2d 680.

Defendant contends the trial court abused its discretion in limiting and directing the mode and manner of direct and cross-examination, in questions asked, in remarks made during the trial, and by interference with the cross-examination of Gutierez by defendant's counsel. We shall deal with the latter separately.

It is, of course, true that a trial judge should so conduct his court in a criminal trial that the accused will have a fair and impartial trial. In this respect we have said:

"Trial judges and public prosecutors are charged with the duty of conducting criminal trials in such a manner that the accused may have a fair and impartial trial, uninfluenced by prejudice, passion and public clamor." Cooper v. State, 120 Neb. 598, 234 N. W. 406.

"The trial judge must have the right to superintend the general course of trials of causes before him, as well as the conduct of counsel engaged therein, but this authority should be carefully and moderately exercised. The judge should be so absolutely impartial upon the trial of a cause as to give no ground for suspicion that he has any opinion upon the merits of the cause on trial, and the greatest care should at all times be observed that no act or word should escape which would deprive a judge of the well-earned reputation of American courts for absolute impartiality." Fager v. State, 22 Neb. 332, 35 N. W. 195. Therein we also said: "While it is the right of a trial judge to interrogate witnesses when essential to the administration of justice, yet the practice of so doing, except when absolutely necessary, should be discouraged. * * *." See, also, Leo v. State, *supra*; Culver v. Union P. R. R. Co., 112 Neb. 441, 199 N. W. 794.

"The trial judge during the course of a trial should refrain from remarks that are calculated in any way

to influence the minds of the jury." Moore v. State, 147 Neb. 390, 23 N. W. 2d 552.

"Such partial remarks must be avoided by the trial judge, for it is a well-known fact that jurors are usually alert to discover the attitude of the court respecting the merits of the case, and particularly in criminal cases." Hansen v. State, 141 Neb. 278, 3 N. W. 2d 441.

Numerous times during the course of the trial, while defendant's counsel was questioning witnesses through an interpreter, the court allowed the special prosecutor to ask questions of the interpreter. It appears the special prosecutor was conversant with the language of the witnesses. This questioning was permitted for the purpose of ascertaining whether the statements made by the witnesses were being properly translated by the interpreter.

When the testimony of a witness is presented through an interpreter we think either party should be permitted to show error, if it exists, in the translation made by the interpreter of a witness's answer. For this purpose the trial court may properly allow opposing counsel to interrupt the proceedings for the purpose of cross-examining the interpreter in order to determine the correctness of his translation for to wait until the examination has been completed would often defeat the very purpose thereof.

We find no merit to this contention. We think the record shows the trial court so conducted the trial that the defendant had a fair and impartial trial.

Defendant also contends the special prosecutor was guilty of such misconduct as requires a reversal of this case, claiming the record shows he was out to get a conviction and was not too careful about the means of procuring it. We have said: "Prosecutors are not partisans against the accused, and should handle all prosecutions without bias or prejudice as between the public and the defendant." Plessman v. State, 130 Neb. 758, 266 N. W. 629.

" 'It is the duty of the prosecuting attorney to conduct the trial in such a manner as will be fair and impartial to the rights of the accused, no matter how guilty, in his opinion, defendant may be; and this rule applies to special counsel assisting the prosecuting attorney.' 16 C. J. 886." Cooper v. State, *supra.* See, also, Bailey v. People, 54 Colo. 337, 130 P. 832, 45 L. R. A. N. S. 145, Ann. Cas. 1914C 1142; State v. Haney, 222 Minn. 124, 23 N. W. 2d 369; 23 C. J. S., Criminal Law, § 1081, p. 519.

As stated in State v. Haney, *supra:* "An accused, whether guilty or innocent, is entitled to a fair trial, and it is the duty of the court and of prosecuting counsel as well to see that he gets one. There must be no conduct, either by argument or by the asking of irrelevant questions, the effect of which is to inflame the prejudices or excite the passions of the jury against the accused."

We have examined the record carefully with this contention in mind and cannot arrive at the same conclusion as defendant's counsel. It is true that the case was vigorously prosecuted but it was done without bias or prejudice. Nor can it be said the conduct of either the special prosecutor or county attorney was such that it would have any tendency to inflame the prejudices or excite the passions of the jury against the accused.

Defendant complains of the trial court's failure to enforce compulsory service on, and attendance of, Emil Comes Last, an inmate of the Nebraska penitentiary.

Defendant filed an application and showing for compulsory process and attendance of certain witnesses, including Emil Comes Last, and secured an order of the court for such compulsory process, which order was filed in the office of the clerk of the court on February 9, 1954. This was done pursuant to and under the authority of section 29-1903, R. R. S. 1943. A subpoena was thereupon issued for the witness Emil Comes Last, returnable February 10, 1954. This was mailed to the sheriff of Lancaster County, Nebraska, and was received by him on February 15, 1954. The subpoena was re-

turned without being served accompanied by a letter from the Lancaster County sheriff stating that it could not be served because the return date had passed at the time it was received and further stating that if another set of papers were issued with a proper date he would be glad to serve the same.

It is apparent that the purpose of requesting the attendance of this witness was to have him testify to the altercation he had with Gutierez while they were both being held in the county jail at Chadron. The trial court was of the opinion that the testimony of this witness was incompetent and so advised counsel. We have confirmed this ruling and consequently the witness properly would not have been permitted to testify thereto if present. Therefore no prejudice resulted from his not being present.

Defendant contends that by reason of Amendment VI to the Constitution of the United States; Article I, section 11, Constitution of the State of Nebraska; and section 29-1903, R. R. S. 1943, he was entitled to compulsory service on and attendance of this witness, even though he was in the penitentiary. On the other hand the State claims, under the factual situation here, that section 25-1233, R. R. S. 1943, has application and the witness's testimony could only be obtained by deposition. This statute provides: "A person confined in any prison in this state may, by order of any court of record, be required to be produced for oral examination in the county where he is imprisoned; but in all other cases his examination must be by deposition."

Whether or not this statute applies only to civil cases or, if to criminal cases, it is unconstitutional because of the constitutional provisions hereinbefore referred to, we do not decide. After the sheriff of Lancaster County returned the original subpoena without being served, stating his reason for not doing so, another set of papers was never issued. Consequently service was never had and the question of whether or not those in

charge of the witness would have let him attend the trial was never raised. Until a situation arises where, after service is had, those in charge of the penitentiary refuse to permit the witness to attend this question is not properly here for our determination.

Defendant contends the direct and cross-examination of the witness Gutierez shows that he was of unsound mind and for that reason his testimony was incompetent and all of his testimony should have gone out. See § 25-1201, R. R. S. 1943.

In State v. Meyers, 46 Neb. 152, 64 N. W. 697, 37 L. R. A. 423, we said: "One who by reason of insanity or imbecility is unable to comprehend the obligation of an oath, or to understand and intelligently answer the questions put by the court upon a voir dire examination, is, under the provisions of section 328, Code Civil Procedure, (now section 25-1201, R. R. S. 1943), incompetent to testify as a witness."

We therein went on to say, quoting from Davis v. State, 31 Neb. 247, 47 N. W. 854, that: "The question of competency of a person to be a witness must be left to the sound legal discretion of the trial judge, leaving to the jury to determine the credit that ought to be given to the testimony."

As stated in Fisher v. State, *supra:* "The credibility of witnesses and the weight of their testimony are for the jury to determine in a criminal case, and the conclusion of the jury cannot be disturbed unless it is clearly wrong."

Gutierez, an accomplice who was with the defendant when the crime was committed, took the witness stand shortly before the noon hour on Wednesday, February 10, 1954. The State finished with his direct examination during the course of the afternoon and he was turned over to the defendant for cross-examination. He was cross-examined by defendant's counsel for the balance of that day, all day Thursday, February 11, 1954, and all day Friday, February 12, 1954. The evidence shows

that the witness slept very little, if any, during the night preceding Friday and that he prayed most of the night, and that on Friday, during the lunch hour, someone handed him a rosary which he put on and wore. Shortly after his return to the stand on Friday, following the lunch hour, it is apparent the witness became emotionally upset and that his responses to questions dealt with matters foreign thereto. In this situation the court, on Saturday morning, February 13, 1954, permitted the State to endorse on the information and call as a witness one E. V. Garcia. This witness had studied the religious customs of the witness's people and described them. It thereby became apparent that in his highly emotional condition of Friday afternoon, brought about by the various factors already described, that Gutierez' conscience was bothering him and that he was going back to the religious training of his youth. On Monday, February 15, 1954, when Gutierez returned to the stand he was again normal and his answers rational, the same as they had been prior to his temporary emotional upset on Friday afternoon. We do not think the trial court abused its discretion in permitting Gutierez to continue to be a witness under these circumstances.

Defendant also complains of the trial court's actions in permitting E. V. Garcia to testify and in permitting a recess, as far as the witness Gutierez was concerned, from Friday afternoon to Monday morning.

When a witness, while testifying, becomes ill, either from physical or mental exhaustion, or both, it becomes not only the right but the duty of the trial court to grant a reasonable adjournment or permit the witness to be withdrawn for a reasonable length of time so that, if possible, he may sufficiently recover to resume the stand. That is exactly what the trial court did.

Also when the witness started referring to matters, which, if unexplained, might mislead the jury it was proper for the State to call a witness for the purpose of explaining them. This testimony of the witness could

not reasonably have been anticipated beforehand so it was perfectly proper for the court to permit the State to call a witness for that purpose and to permit the endorsement of his name on the information. We think this matter was properly handled and done in a manner that fully protected all of defendant's rights.

We find that none of defendant's contentions are of such a nature as to require a new trial. We have come to the conclusion that the defendant had a fair and impartial trial and therefore affirm the verdict of the jury and the sentence imposed on defendant by the court in accordance therewith.

AFFIRMED.

CHAPPELL, J., participating on briefs.

BILLIE B. SVOBODA ET AL., APPELLANTS, V. RALPH O. DE WALD, APPELLEE.

68 N. W. 2d 178

Filed January 14, 1955. No. 33615.

1. **Frauds, Statute of: Brokers.** Section 36-107, R. R. S. 1943, is a virtual extension or enlargement of the statute of frauds.
2. ———: ———. A verbal contract for the sale of lands between the owner thereof and any broker or agent employed to sell the same is not contrary to public policy. The parties may carry it out if they wish. Where it is reduced to writing before suit is brought, the object of section 36-107, R. R. S. 1943, is fulfilled.
3. **Frauds, Statute of.** The object of the statute of frauds is to prevent frauds and perjuries, and, while certain contracts are by the terms of the statute declared void, the uniform construction placed upon the statute by the courts renders such contracts not void, but merely unenforceable for want of the evidence which the statute requires.
4. **Pleading.** The character of a cause of action is determined by the allegations of fact contained in the petition, unaffected by the conclusions of the pleader.
5. ———. Under the code system of pleading, it is not necessary to state a cause of action or defense in any particular form.

The facts are to be stated. All that the law requires is that there shall be a cause of action or defense.

6. **Frauds, Statute of: Brokers.** A contract sufficient to meet the requirements of section 36-107, R. R. S. 1943, may be created although the same papers are not signed by the owner and the broker or agent.

7. ———: ——. The word subscribed as used in section 36-107, R. R. S. 1943, is synonymous with the word signed.

8. ———: ———. The requirement of section 36-107, R. R. S. 1943, that the contract be subscribed by both parties is met where the signatures of the parties are placed thereon, for the purpose of authenticating and giving force and effect to the contract, whether they be placed at the bottom, the top, or in the body of the instrument.

9. ———: ———. The fact that the signature of the broker or agent to the contract appears under a designation of witness is sufficient to meet the requirements of section 36-107, R. R. S. 1943, where the record sustains a conclusion that he signed it as a party to a binding contract.

10. ——: ———. The requirements of section 36-107, R. R. S. 1943, are met as to the description of the land if the contract contains data from which the land may be identified and ascertained with certainty.

APPEAL from the district court for Thayer County: STANLEY BARTOS, JUDGE. *Reversed and remanded with directions.*

Robert B. Waring, for appellants.

W. O. Baldwin, Davis, Healey, Davies & Wilson, and *Robert A. Barlow, Jr.,* for appellee.

Heard before SIMMONS, C. J., CARTER, MESSMORE, YEAGER, CHAPPELL, WENKE, and BOSLAUGH, JJ.

SIMMONS, C. J.

In this action plaintiffs seek to recover judgment on a contract for real estate commission. Issues were joined. At the beginning of the trial, the defendant objected to the introduction of any evidence on the ground that the petition did not state a cause of action for the reason that the relief sought was based on an oral contract within the statute of frauds. The trial

court sustained the objection. Plaintiffs elected not to plead over. The trial court dismissed the action. Plaintiffs appealed.

We reverse the judgment of the trial court and remand the cause for further proceedings.

In determining the question presented, we assume that all facts well pleaded and any reasonable intendments implied therefrom are true. We recite the facts pleaded by plaintiffs.

Plaintiffs are copartners engaged in the business of selling real and personal property at auction and the plaintiff Billie B. Svoboda is a licensed real estate broker.

On or about May 1, 1952, defendant was the owner of a quarter section of land in Jefferson County. He entered into an oral contract with the plaintiff Billie B. Svoboda whereby plaintiffs were to advertise and conduct the sale of the farm land, and plaintiffs were to pay all the expenses. If the farm did not sell for $20,000 or more, plaintiffs were to receive no compensation. If it sold for $20,000 or more, plaintiffs were to receive compensation of 2 percent of $20,000, together with all amounts over and above $20,000. Plaintiffs performed. The land was sold at auction for $23,150. Immediately thereafter plaintiffs, the defendant, and the purchaser entered into a contract in writing. Reference to the terms of that writing will be made later herein. The purchaser paid the purchase price and defendant conveyed the land to the purchaser. Plaintiffs seek to recover the amount due under the contract in the sum of $3,550 and interest.

The statute involved is: "Every contract for the sale of lands between the owner thereof and any broker or agent employed to sell the same, shall be void, unless the contract is in writing and subscribed by the owner of the land and the broker or agent. Such contract shall describe the land to be sold, and set forth the compensation to be allowed by the owner in case of sale by the broker or agent." § 36-107, R. R. S. 1943.

This act is one of long standing. We have said that it is a virtual extension or enlargement of the statute of frauds, designed to prevent the bringing of actions which experience has shown were often conceived in fraud and maintained by perjury. Baker v. Gillan, 68 Neb. 368, 94 N. W. 615. We have also said with reference to this act: "Whenever a sale of real estate is effected through the efforts of the broker, or through information derived from him, so that he may be said to be the procuring cause of it, his services are regarded as highly meritorious and beneficial, and the law leans to that construction which will best secure the payment of his commission." Clark v. Davies, 88 Neb. 67, 129 N. W. 165.

We have also held: "The purpose of the statute was to protect landowners from the fictitious claims of real estate dealers who actually never sold the land they claimed to sell and never earned the commissions for which they were claimants, but it was never the intention of the legislature to protect the real estate owner against legitimate claims for services which he authorized in writing and which were honestly rendered." Howell v. North, 93 Neb. 505, 140 N. W. 779. See, also, Shoff v. Ash, 95 Neb. 255, 145 N. W. 271; Nelson v. Nelson, 95 Neb. 523, 145 N. W. 1004.

We have also held: "* * * a verbal contract of this nature is not contrary to public policy, and the parties may carry it out if they wish, and in case it is reduced to writing before suit is brought the object of the statute is fulfilled, * * *." Pierce v. Domon, 98 Neb. 120, 152 N. W. 299. In the syllabus it is said: "When an oral contract is made with an agent for the sale of real estate upon commission, and afterwards, in order to satisfy the requirements of section 2628, Rev. St. 1913, the contract is reduced to writing before suit is brought, such written contract furnishes the legal evidence necessary that the contract may be enforced."

We have also held (referring to the statute and Pierce

v. Domon, *supra*): "That section provides that every such contract of brokerage shall be void unless in writing. The word 'void' is so often used for 'voidable' that the case cited so construes it. In Riley v. Bancroft's Estate, 51 Neb. 864, the same construction was given to the word 'void' in section 2631, Rev. St. 1913. In the opinion Judge Irvine fully discusses the reason of the rule, and states that reason in the second paragraph of the syllabus: 'The object of the statute of frauds is to prevent frauds and perjuries, and, while certain contracts are by the terms of the statute declared void, the uniform construction placed upon the statute by the courts renders such contracts not void, but merely unenforceable for want of the evidence which the statute requires.'" Miles v. Lampe, 102 Neb. 619, 168 N. W. 640.

The defendant contends that even though the writing pleaded by plaintiffs is sufficient to take the case out of the prohibitions of section 36-107, R. R. S. 1943, nevertheless plaintiffs cannot prevail here because they undertake to recover under the "oral agreement."

Plaintiffs also alleged that they were entitled to have and recover judgment against the defendant in the sum of $3,550. We have held that: "The character of a cause of action is determined by the allegations of fact contained in the petition, unaffected by the conclusions of the pleader." Benson v. Walker, 157 Neb. 436, 59 N. W. 2d 739. In the syllabus it is said: "Under the code system of pleading, it is not necessary to state a cause of action or defense in any particular form. The facts are to be stated. All that the law requires is that there shall be a cause of action or defense."

Plaintiffs obviously pleaded a cause of action in reliance on the written agreement, which is attached to and incorporated in their petition. We find no merit in the contention.

The question here is: Is the writing sufficient to meet the requirements of the statute? Plaintiffs alleged that a contract in writing was entered into by the plaintiffs,

the defendant, and the purchaser. The writing consists of a Uniform Purchase Agreement whereby the purchaser agrees to buy. This is signed only by the purchaser and witnessed by Harvey W. Hess. This is followed by a receipt for the down payment. It is signed by the plaintiffs as "Agent" and witnessed by Mr. Hess.

This is followed by two separate paragraphs which are as follows:

"I (we) hereby accept the above purchaser's proposition on the terms above stated and agree to deliver and convey said premises and perform all the terms and conditions set forth.

"I (we) further agree to pay the above named agent the cash commission agreed upon in the amount of $3,550.00."

This is signed by the defendant, and toward the left-hand side below "Witness:" appears the signature "Bill B. Svoboda."

Defendant contends that this is not a contract between plaintiffs and defendant. With specific reference to this statute, we have held: "A contract sufficient to meet the requirements of the statute may be created by letters between the parties, and may be sufficient to create a contract between principal and agent for the sale of real estate though the same papers are not signed by both parties." Shoff v. Ash, *supra*. If such a contract can be created by letters, certainly it can be created by separate writings attached to each other.

Obviously the contract is in writing, which is one of the requirements of the act.

Is it subscribed by the owner of the land and the broker or agent? Concededly, the owner's signature is there and signed below the language above quoted. The signature of the broker is also there beneath the word "witness." Plaintiffs pleaded that they are parties to that contract. As a party, they signed the receipt for the down payment. As to the Uniform Purchase Agreement and the receipt for down payment, a disinterested

party appeared as a witness. The broker himself signed the third part of this instrument.

With reference to this statute, we have held: "The word 'subscribed' as used in section 74, ch. 73, Comp. St., 1905, relating to contracts between real estate brokers and landowners, is synonymous with the word 'signed.'

"The requirement of said section that the contract be 'subscribed' by both parties is met where the signatures of the parties are placed thereon, for the purpose of authenticating and giving force and effect to the contract, whether they be placed at the bottom, the top, or in the body of the instrument." Myers v. Moore, 78 Neb. 448, 110 N. W. 989. This holding has been approved as late as Sofio v. Glissman, 156 Neb. 610, 57 N. W. 2d 176.

With reference to the fact that the name of the broker is signed under the word "witness," the rule is: "The fact that the signature of the broker to the contract appears under the name of one who signed it as a witness is not entitled to serious consideration, where the evidence shows that the broker signed it as a binding contract." Felthauser v. Greeble, 100 Neb. 652, 160 N. W. 983. In the body of the opinion we said: "It is further contended that plaintiff only signed the brokerage contract as a witness, because his signature appears at the left-hand side of the agreement under the signature of I. F. Imm, who signed it as a witness. This contention is not entitled to serious consideration, where the evidence shows that plaintiff signed it as his contract."

We think it a fair inference from the facts recited above that the broker signed the paper as his contract. See Jansen v. McNamara, 40 S. D. 155, 166 N. W. 630.

Does the contract describe the land to be sold? Obviously, it does. The detailed legal description appears in the first paragraph of the Uniform Purchase Agreement over the signature of the purchaser. Directly over defendant's signature is his agreement to deliver and convey "said premises." The rule is that the requirements of the statute are met as to the description of the

land "if the contract contains data from which the land may be identified and ascertained with certainty." Powers v. Bohuslav, 84 Neb. 179, 120 N. W. 942. See, also, Howell v. North, 93 Neb. 505, 140 N. W. 779.

The description here meets the test of the statute.

Does the contract set forth the compensation to be allowed by the owner in case of a sale by the broker or agent? Obviously it does in this language over the signature of the defendant: "I (we) further agree to pay the above named agent the cash commission agreed upon in the amount of $3,550.00."

The contract pleaded meets the test of the statute. It follows that the trial court erred in sustaining the motion to dismiss.

The judgment is reversed and the cause remanded for further proceedings consistent with this opinion.

REVERSED AND REMANDED WITH DIRECTIONS.

STATE OF NEBRASKA, APPELLEE, V. JAMES ANDERSEN, A MINOR CHILD UNDER 18 YEARS OF AGE, ET AL., APPELLANTS.
68 N. W. 2d 146

Filed January 14, 1955. No. 33657.

1. **Infants: Process.** The provisions of section 43-206, R. R. S. 1943, for issuance and service of process are jurisdictional.
2. ———: ———. In the absence of the issuance and service of process in conformity with section 43-206, R. R. S. 1943, or a waiver thereof, an order committing a child to the industrial school is void for want of jurisdiction.

APPEAL from the district court for Lancaster County: HARRY R. ANKENY, JUDGE. *Reversed.*

William L. Walker and Earl Ludlam, for appellants.

Clarence S. Beck, Attorney General, *Clarence A. H. Meyer,* and *Homer L. Kyle,* for appellee.

Heard before SIMMONS, C. J., CARTER, MESSMORE, YEAGER, CHAPPELL, WENKE, and BOSLAUGH, JJ.

WENKE, J.

On March 17, 1954, with the consent of the county attorney, a petition was filed in the juvenile division of the district court for Lancaster County charging James Anderson, a minor then of the age of 14 years, with being "* * * dependent, neglected and delinquent on account of the following facts: that said child is without proper parental care and control and is growing up under conditions which may tend to cause said child to lead a vicious and immoral life; that said child is delinquent in school attendance and guilty of automobile theft on or about 3-5-1954 and of driving the car out of the state; * * *."

This petition sets forth that the minor was in the custody of his parents, Roy and Meta G. Anderson, who were then living at 3245 North 5th Street, Lincoln, Nebraska.

On March 31, 1954, the court found: "That James Anderson is growing up in mendicancy and crime because of the want of proper parental care, and is a proper subject for the Boys' Training School."

In view of this finding defendant was ordered committed to the Boys' Training School located near Kearney and was delivered into its custody on the same day.

On April 2, 1954, Roy F. and Meta N. Andersen, the boy's parents, filed a motion for new trial. This was overruled on May 10, 1954, and on appeal taken therefrom to this court. It should here be stated that the minor's correct name is James Andersen.

The record fails to show that the parents were ever notified of the proceedings nor did they make any appearance therein until they filed their motion for new trial.

We said in Ripley v. Godden, 158 Neb. 246, 63 N. W. 2d 151, that: "The indispensable elements of due process are a tribunal with jurisdiction, notice of hearing to the proper party, and an opportunity for a fair hearing according to applicable procedures."

And held in State v. Roth, 158 Neb. 789, 64 N. W. 2d 799:

"The provisions of section 43-206, R. R. S. 1943, for issuance and service of process is jurisdictional.

"In the absence of the issuance and service of process in conformity with section 43-206, R. R. S. 1943, or a waiver thereof, an order committing a child to the industrial school is void for want of jurisdiction.

"A judgment rendered where there is no proper service of process may be collaterally impeached."

In case the issues raised by such a petition are contested, we said in Ripley v. Godden, *supra:* "The interests of all parties concerned require, when the issue is contested in court, that the facts be shown by competent evidence. This should be accomplished by substantial observance of the rules of evidence and procedure that are usually considered essential to protect substantial rights in hearings without a jury had for the adjudication of issues of fact in civil cases in the district court." And, as therein held, the court reporter should make a record thereof.

We find the order of commitment was entered without jurisdiction and, because thereof, the judgment of the district court is reversed

REVERSED.

LOUIS WOODARD, PLAINTIFF IN ERROR, V. STATE OF NEBRASKA, DEFENDANT IN ERROR.

68 N. W. 2d 166

Filed January 21, 1955. No. 33464.

1. **Homicide: Trial.** A purpose to kill and malice are material elements of murder in the second degree and, under a charge therefor, the burden is on the State to prove both beyond a reasonable doubt. § 28-402, R. R. S. 1943.
2. ———: ———. Where the evidence does not prove a higher grade of homicide than manslaughter it may be prejudicial error

to submit to the jury the issue of murder in the second degree, even though the trial results in acquitting accused of the graver offense and in finding him guilty of the lesser.

3. ———: ———. Where the evidence and circumstances of the crime are such that different conclusions may properly be drawn therefrom as to the degree, the trial court is without error in submitting the different degrees to the jury for its determination.

4. ———: ———. The law implies malice in cases of homicide if the killing alone is shown, but, if the circumstances attending the homicide are fully testified to by eyewitnesses, it is error to instruct the jury that there is a presumption of malice from the fact of the killing.

ERROR to the district court for Douglas County: JAMES T. ENGLISH, JUDGE. *Affirmed.*

Ralph W. Hetzner, for plaintiff in error.

Clarence S. Beck, Attorney General, and *Robert V. Hoagland,* for defendant in error.

Heard before SIMMONS, C. J., CARTER, MESSMORE, YEAGER, CHAPPELL, WENKE, and BOSLAUGH, JJ.

WENKE, J.

This is an error proceeding from the district court for Douglas County. A jury therein found plaintiff in error Louis Woodard, defendant below, guilty of manslaughter. He thereafter filed a motion for new trial, which was overruled. He was then sentenced to serve 5 years in the penitentiary. He took this appeal therefrom. We shall herein refer to him as the defendant.

There is no question about the sufficiency of the evidence. It fully supports the jury's finding that defendant is guilty of manslaughter in causing the death of Veodist Luster, also known as Otis V. Luster, on April 21, 1952. The evidence in this respect shows, without dispute, that Woodard held the gun, a .38 caliber Smith & Wesson revolver, when it was discharged, which discharge resulted in Luster's death. The circumstances under which it happened, as testified to by the State's witnesses, are sufficient to establish manslaughter beyond a reasonable doubt. See,

Ford v. State, 71 Neb. 246, 98 N. W. 807, 115 Am. S. R. 591; Turpit v. State, 154 Neb. 385, 48 N. W. 2d 83.

The State charged: "* * * that on or about the 21st day of April in the year * * * one thousand nine hundred and fifty-two Louis Woodard * * * of the County of Douglas * * *, in the County of Douglas and State of Nebraska * * *, then and there being, then and there unlawfully, maliciously, feloniously, and purposely, but without premeditation and deliberation, did kill Veodist Luster, also known as Otis V. Luster; defendant thus committed murder in the second degree, * * *."

The trial court submitted both second degree murder and manslaughter to the jury. Defendant contends the trial court erred in submitting the issue of second degree murder because there was no evidence adduced proving, or tending to prove, malice and a purpose to kill on his part. He claims such evidence was an absolute prerequisite to warrant the submission of the issue of murder in the second degree to a jury.

Our criminal statutes provide, as to this crime, as follows: "Whoever shall purposely and maliciously, but without deliberation and premeditation, kill another, every such person shall be deemed guilty of murder in the second degree; and upon conviction thereof shall be imprisoned in the penitentiary not less than ten years, or during life." § 28-402, R. R. S. 1943.

In Whitehead v. State, 115 Neb. 143, 212 N. W. 35, we said: "According to this statute a purpose to kill and malice are material elements of murder in the second degree and, under a charge therefor, the burden is on the state to prove both beyond a reasonable doubt. Where the evidence does not prove a higher grade of homicide than manslaughter, it may be prejudicial error to submit to the jury the issue of murder in the second degree, though the trial results in acquitting accused of the graver offense and in finding him guilty of the lesser." See, also, Runyan v. State, 116 Neb. 191, 216 N. W. 656; Clark v. State, 131 Neb. 370, 268 N. W. 87.

As stated in Clark v. State, *supra:* "'* * * it is the duty of the court to instruct the jury only on such degrees of homicide as find support in the evidence.' Williams v. State, 103 Neb. 710, 174 N. W. 302."

Alice Barbara Roberts, who was present at the time the killing took place, testified she heard defendant say at the time the shot was fired, "I will blow your head off." The bullet fired hit the deceased in the right temple. From all of the testimony, particularly that of the foregoing witness, a jury could have found beyond a reasonable doubt that this remark was directed toward the deceased at the time defendant fired the shot.

Where the evidence and circumstances of the crime are such that different conclusions may properly be drawn therefrom as to the degree, the trial court is without error in submitting the different degrees to the jury for its determination. See Jackson v. State, 133 Neb. 786, 277 N. W. 92.

We said in Fields v. State, 125 Neb. 290, 250 N. W. 63: "If either Brown or the accused pointed the gun at the deceased, or some other person, and purposely fired the gun, then the intent to kill became specific * * *."

While it is true that the jury did not find such purpose and intent existed, nevertheless, we think the evidence adduced was sufficient to support such a finding if it had been made. It was therefore not only proper but the duty of the trial court to submit the issue of second degree murder.

The defendant further contends the trial court committed reversible error by giving instruction No. 12. Instruction No. 12, insofar as herein material, is as follows: "'Maliciously' as used in the Statutes, means a malicious manner, with malice. Malice is that state or condition of mind indicated by a wicked and malicious purpose which characterizes the perpetration of a wrongful act intentionally committed, and without lawful excuse or justification. It is that quality or frame of mind

which prompts the unlawful act. This frame or condition of mind is denominated express or actual malice, and *its existence, if it does exist, is to be inferred or found by the jury as any other material element in the case —beyond a reasonable doubt;* and, in passing upon this issue, it is competent for the jury to consider the acts, language and conduct of the defendant, as shown by the evidence, in connection with all other facts and circumstances of the trial." (Emphasis ours.)

Defendant complains of that part of the instruction which we have emphasized and particularly the use of the word "inferred."

As stated in his brief: "In Instruction No. 12 wherein the Court defined the word 'maliciously' the jury was told as a matter of law that malice, 'and its existence, if it does exist, is to be inferred or found by the jury as any other material elements in the case—beyond a reasonable doubt.' Thus the jury was permitted to infer or presume malice although the law of this State expressly forbids any inference or presumption of malice when the facts attending the homicide are brought out by actual witnesses thereto."

"Malice is never implied or presumed as a matter of law, where the circumstances of the killing are testified to on the trial by eyewitnesses." Runyan v. State, *supra.*

In Whitehead v. State, *supra,* we said: " 'The law implies malice in cases of homicide if the killing alone is shown, but, if the circumstances attending the homicide are fully testified to by eye-witnesses, it is error to instruct the jury that there is a presumption of malice from the fact of the killing.' Lucas v. State, 78 Neb. 454." See, also, Vollmer v. State, 24 Neb. 838, 40 N. W. 420; Egbert v. State, 112 Neb. 129, 198 N. W. 1014; Runyan v. State, *supra.*

We have already stated that evidence was introduced by the State from which the element of malice could be found to exist. Nowhere in instruction No. 12 does the

court refer to a presumption of malice. "Infer" means to derive by reasoning or to conclude from facts. Webster's New International Dictionary (2d ed.), p. 1273, defines "an inference" as: "* * * a logical conclusion from given data or premises; * * *."

In Braunie v. State, 105 Neb. 355, 180 N. W. 567, 12 A. L. R. 658, the court gave the following instruction: " 'Malice in law includes, but is not confined to, hatred, ill-will, or desire for revenge. It may for the purposes of this case be defined as that condition of the human mind which shows a heart regardless of social duties and fatally bent on mischief, the existence of which is inferred from the acts done or words spoken.' "

Therein it was stated: "Defendant makes two objections to this instruction: First, he contends the instruction infers that malice is, in law, presumed from the fact shown in this case; * * *."

The court then went on to say, in passing on this instruction, that: "As to the first objection, the defendant relies upon the decisions in Flege v. State, 90 Neb. 390, Davis v. State, 90 Neb. 361, and Vollmer v. State, 24 Neb. 838, where it is decided that malice cannot be presumed, as a matter of law, from the fact of killing, when all the circumstances surrounding the killing are shown, and that the question of malice must then be left to the jury. We do not believe the instruction open to the objection made, since it does not instruct that malice is to be inferred from the fact of killing, but, as we interpret it, the jury is informed that the jury itself is to determine the question of malice, and that it may infer malice from the acts done and things said."

The foregoing is the exact situation here for instruction No. 12 goes on to tell the jury, in passing upon this issue, it could consider the acts, language, and conduct of the defendant, as shown by the evidence, in connection with all other facts and circumstances shown. Such is also the effect of other instructions given.

In view of what we have said we find defendant's

contentions to be without merit and therefore affirm the judgment and sentence of the trial court.

AFFIRMED.

IN RE APPLICATION OF PLATTE VALLEY PUBLIC POWER AND IRRIGATION DISTRICT.
PLATTE VALLEY PUBLIC POWER AND IRRIGATION DISTRICT, A PUBLIC CORPORATION, APPELLANT, V. ALVIN A. ARMSTRONG ET AL., APPELLEES.
68 N. W. 2d 200

Filed January 21, 1955. No. 33582.

1. **Eminent Domain: Trial.** Where a jury is permitted to view the premises involved in eminent domain litigation, the result of its observations is evidence which, in arriving at a verdict, it may consider only in connection with other competent evidence.
2. **Eminent Domain.** The market value of lands taken by eminent domain proceedings, together with damages, if any, to other remaining lands by severance, are computable as of the time of the taking, which is deemed to occur when the petition for condemnation is filed.
3. ———. The words "or damaged" appearing in Article I, section 21, Constitution of Nebraska, include all actual damages resulting from the exercise of the right of eminent domain which diminishes the market value of private property.
4. **Eminent Domain: Crops.** An owner or tenant in possession of a farm who at the proper time, in due course of good husbandry and in good faith plants a crop on land after the petition for condemnation is filed but before condemner has deposited the award with the county judge or before condemner has by some binding election accepted the award, and such crop is growing but unmatured at the time of such deposit or election, may as of that time ordinarily recover damages for injury to or destruction of his share of the value of such crop in its then condition as well as damages to his leasehold estate then existent.
5. **Eminent Domain: Trial.** Condemnee must establish the foregoing conditions by a preponderance of competent evidence which also meets the requirements as to measure of damages and sufficiency and clarity of proof to take it out of the realm of speculation for the purpose of submission to a jury.
6. **Eminent Domain: Landlord and Tenant.** Generally, however, if

a leasehold interest is taken or injured, lessee is entitled to a sum which will restore the money loss consequent to the taking or injury. This consists generally of the fair market value of the leasehold or unexpired term of the lease, and is said to be the difference between the rental value of the remainder of the term and the rent reserved in the lease, bearing in mind that where the rent reserved equals or exceeds the rental value, the lessee has suffered no loss and cannot recover.

7. **Trial: Damages.** A jury should be fully and fairly informed as to the various items of damages which it should take into consideration in arriving at its verdict. In this respect it is the duty of the trial court to instruct as to the proper basis upon which damages are to be assessed for each such item.
8. **Eminent Domain: Damages.** A party to an action in condemnation has a right to have all of the competent evidence of which he has availed himself on the question of damages submitted to a jury for consideration, and a failure of the trial court to allow its submission is reversible error.
9. ———: ———. The general rule is that the burden of showing the damages which the landowner or lessee will suffer rests upon him while the burden is on condemner to show matters which tend to reduce or mitigate the damages.
10. **Eminent Domain: Appeal and Error.** Condemnation is a special statutory proceeding and on appeal to the district court from an appraisement of damages in such cases, if other issues than the question of damages are involved, they must be presented by proper pleadings.
11. ———: ———. If on appeal to the district court a condemner claims special benefits, such issue should be appropriately pleaded and supported by competent evidence.
12. **Eminent Domain.** One contiguous tract or unit is that which in general belongs to the same proprietor as that taken, and is continuous with it and used together for a common purpose, whether or not the same is separated by platted or existing lines, lots, blocks, streets, alleys, or like divisions.
13. **Eminent Domain: Trial.** Ordinarily in a condemnation proceeding it is a question of law whether or not the property involved constitutes one contiguous unit or tract, but where the doubt is factual, depending on conflicting evidence or on different views of the evidence, the court should submit the question to the jury under proper instructions.
14. ———: ———. Where the property involved is one contiguous tract or unit, in estimating the damages occasioned by the appropriation of a part thereof for public use, the injury to the property remaining as well as the market value of the property actually taken should be considered, although the petition filed

by the condemner for the appointment of appraisers only describes the property taken.

15. **Eminent Domain: Damages.** The measure of damages for land taken for public use in such cases is the fair and reasonable market value of the land actually appropriated and the difference in the fair and reasonable market value of the remainder of the land before and after the taking.

16. **Trial.** It is the duty of the trial court, without request, to instruct the jury on each issue presented by the pleadings and supported by evidence.

17. ———. A litigant is entitled to have the jury instructed as to his theory of the case as shown by pleading and evidence, and a failure to do so is prejudicial error.

18. ———. The purpose of an instruction is to furnish guidance to the jury in its deliberations, and to aid it in arriving at a proper verdict; and, with this end in view, it should state clearly and concisely the issues of fact and the principles of law which are necessary to enable it to accomplish the purpose desired.

APPEAL from the district court for Keith County: ISAAC J. NISLEY, JUDGE. *Reversed and remanded.*

Crosby & Crosby and *Jess C. Nielsen,* for appellant.

E. H. Evans and *McGinley, Lane, Powers & McGinley,* for appellees.

Heard before SIMMONS, C. J., CARTER, MESSMORE, YEAGER, CHAPPELL, WENKE, and BOSLAUGH, JJ.

CHAPPELL, J.

Plaintiff, Platte Valley Public Power and Irrigation District, filed its petition in the county court on July 28, 1952, to condemn a necessary right-of-way for the construction, operation, and maintenance of a dike along the south 300 feet of Lot 9, located in the west half of the southeast quarter of Section 6, Township 13 North, Range 36 West of the 6th P. M., in Keith County, Nebraska. The land actually taken was 9.1 acres of tillable land and 24 acres of accretion or riparian land directly south thereof, which was non-tillable and partially covered with trees, brush, bunch grass or clover, and had a frontage of about 792 feet along the South

Platte River. Such 33.1 acres so taken was the southernmost portion of Lot 9 which theretofore consisted of about 67.8 acres, all lying south of and extending along U. S. Highway No. 30 and the Union Pacific Railroad double track rights-of-way. Lot 9 will be hereinafter called the south tract. It originally consisted of 48.87 more acres adjacent thereto on the east and extending along such rights-of-way, but plaintiff had previously appropriated that portion thereof. The time when that was done does not appear in this record. The rights-of-way aforesaid were fenced in but there were private gates into private roads across them which were at times claimed to have been used by defendants. However, by what legal right they so crossed the Union Pacific right-of-way is not in any manner shown.

North of such rights-of-way is a tract of 178 acres of land located in the east half of said Section 6. Such land will be hereinafter called the north tract. Sixty-eight acres thereof lying north of and extending along such rights-of-way were in cultivation. However, the remaining 110 acres were non-tillable rough pasture land lying entirely north of such cultivated 68 acres.

Defendants Alvin A. Armstrong and Fred A. Armstrong, hereinafter designated by name or as defendants Armstrong, have owned all the land aforesaid as tenants in common since their father's death in 1951. There are no improvements upon the land except some not too well-defined fences, an old boxcar used as a hunting shack, and a well. However, the boxcar and well are located on the north tract.

Defendant Darrell Thalken, hereinafter designated by name or as defendant Thalken, was a tenant in possession of all the land under a written lease with defendants Armstrong from March 1, 1952, to March 1, 1957, which was allegedly executed in good faith, without knowledge of the contemplated condemnation. The record in that regard discloses that the lease was negotiated in the fall of 1951 when Thalken was orally permitted to enter

and do some farm work upon the north tract. Thalken actually lived several miles west of the land, but the lease aforesaid not only included the land here involved but also superseded a lease theretofore made by Thalken with the father of defendants Armstrong on other described lands formerly owned by him but located some distance west. The lease provided that Thalken would pay as rent one-third of all grain crops delivered, but defendants Armstrong were to supply grass or hay seed and nurse crop, and receive one-half of the seed and hay crops. Thalken was to pay $500 annual cash rent for 489 acres of pasture land, which, contrary to plaintiff's contention, clearly included the 110 acres of pasture land heretofore described in the north tract.

Defendant Clifford Wills, hereinafter designated by name or as defendant Wills, held a 10-year written hunting and fishing lease on all the land involved, which was allegedly entered into with defendants Armstrong on July 10, 1952, just 18 days prior to the filing of plaintiff's application to condemn, without any prior notice or knowledge that such privileges would also be condemned by plaintiff.

Appraisers were duly appointed and qualified, who on August 13, 1952, filed their findings and award respectively assessing the damages as follows: To defendants Armstrong as owners of the land taken and appropriated, $3,125; to defendant Thalken, as tenant in possession, $1,000; and to defendant Wills, lessee of hunting and fishing privileges, $200.

Therefrom plaintiff appealed to the district court, giving notice thereof on September 5, 1952. However, pending such appeal and subject thereto, plaintiff deposited the total award of $4,325 with the county judge on September 13, 1952, took possession of the land condemned, and proceeded to construct the dike thereon. Plaintiff's petition on appeal was not filed in the district court within the time required by statute, but over objection of defendants such petition was subsequently

permitted to be filed instanter by the district court and that issue is not now before the court since defendants did not cross-appeal. Parts of plaintiff's original petition on appeal were stricken in conformity with joint motions of defendants, and plaintiff subsequently filed an amended petition.

Plaintiff's amended petition alleged generally its capacity as a public corporation, and the necessity for condemnation of the described and platted lands actually taken for construction of a dike thereon. It set forth that defendants Armstrong were owners of such land as tenants in common; that defendant Thalken was a tenant in possession of the premises under a written lease; and that defendant Wills claimed to be the owner of a hunting lease thereon. It prayed for a full determination of damages actually sustained by defendants as their respective interests and the law might require with judgment accordingly against plaintiff.

Thereto defendants severally filed answers admitting capacity of plaintiff to condemn, the necessity thereof, and the extent of the land actually taken. In addition, defendants severally filed cross-petitions setting forth the damages claimed for their interests actually taken and rights and interests allegedly included therein. In that regard, so far as important here, defendants Armstrong sought to recover not only the fair and reasonable market value of the land actually taken but also damages allegedly caused thereby and resulting from diminution in the fair and reasonable market value of all the remaining lands in both the north and south tracts, upon the theory that they were one contiguous and continuous tract or unit used together for the common purpose of farming and stock raising. Likewise, defendants Thalken and Wills in their cross-petitions set forth their respective leases and upon comparable theories each sought to recover damages to their respective leasehold interests for the remainder of their terms. Defendant Thalken also claimed damages for the

destruction of unmatured crops on the 9.1 acres planted on August 31, 1952, but such issue was not submitted to the jury and no cross-appeal was taken.

To defendants' answers, plaintiff filed replies in the nature of general denials, and to defendants' cross-petitions, plaintiff filed answers denying generally, denying that the two tracts aforesaid were one contiguous and continuous tract or unit used together for a common purpose, and denying that the land remaining in the north tract or the leases thereon were damaged or depreciated in any manner by the taking from the south tract. It prayed for a full determination of damages sustained by defendants and their respective interests by reason of the taking and the diminution in value, if any, of the land remaining in the south tract, which consisted of 34.7 tillable acres bounded on the north by the rights-of-way.

Thereafter the cause was tried and submitted to a jury which was permitted by stipulation to view the premises. In that connection, the rule is that where a jury is permitted to view the premises involved in eminent domain litigation, the result of its observations is evidence which in arriving at a verdict it may consider only in connection with other competent evidence adduced. Stull v. Department of Roads & Irrigation, 129 Neb. 822, 263 N. W. 148.

Subsequently a verdict was returned in favor of defendants Armstrong, the effect of which was to find that the fair and reasonable market value of the 9.1 acres taken on September 13, 1952, was $1,137.50; that the fair and reasonable market value of the 24 acres then taken was $900; and that the entire remainder of their land was then damaged $2,250 by the taking of said 33.1 acres from the south tract. It was found that defendant Thalken was damaged $2,000 and defendant Wills was damaged $175 by such taking. Plaintiff's motion for new trial was subsequently overruled and judgments were accordingly rendered upon the verdict

in favor of defendants Armstrong for $4,287.50, and in favor of defendant Thalken for $2,000, with interest on each such amount respectively at 6 percent from September 13, 1952, together with costs; and in favor of defendant lessee Wills for $175.

Therefrom plaintiff appealed, assigning and arguing substantially: (1) That the trial court erred in the admission and exclusion of evidence; (2) that the trial court erred in the giving and failing to give instructions; and (3) that the verdict and judgments rendered thereon were speculative and not sustained by competent evidence. We sustain the assignments.

It will be recalled that plaintiff's condemnation petition was filed in the county court on July 28, 1952. Plaintiff argued that nevertheless defendants were erroneously permitted to adduce evidence attempting to fix the market value of the land taken and alleged damages for severance as of September 13, 1952, the date when the award was deposited with the county judge by plaintiff. Further, in that connection plaintiff argued that instructions given by the trial court erroneously directed the jury to fix such market values and damages as of September 13, 1952. It has long been a general rule in this jurisdiction, unchanged by Chapter 76, article 7, R. S. Supp., 1953, that the market value of lands taken by eminent domain proceedings, together with damages, if any, to other remaining lands by severance, are computable as of the time of the taking, which is deemed to occur when the petition for condemnation is filed. In this case, such time was July 28, 1952. Missouri Pacific Ry. Co. v. Hays, 15 Neb. 224, 18 N. W. 51; Fremont, E. & M. V. R. R. Co. v. Bates, 40 Neb. 381, 58 N. W. 959; Stuhr v. City of Grand Island, 124 Neb. 285, 246 N. W. 461; In re Platte Valley Public Power & Irr. Dist., 137 Neb. 313, 289 N. W. 383. Viewed in such light, plaintiff's contentions have merit. However, the record in this case as made by all parties clearly discloses that such claimed market value or damages did not fluctu-

ate, but rather would be the same during July, August, and September. Therefore, the admission of such evidence and direction to the jury, while erroneous, was without prejudice to plaintiff. In a comparable situation this court so held in Northeastern Nebraska R. R. Co. v. Frazier, 25 Neb. 53, 40 N. W. 609, without departing from the general rule heretofore stated.

However, in order to fully complete such general rule it should be borne in mind that Article I, section 21, Constitution of Nebraska, provides: "The property of no person shall be *taken or damaged* for public use without just compensation therefor." (Italics supplied.) The words "or damaged" in said section have been held to include all actual damages resulting from the exercise of the right of eminent domain which diminishes the market value of private property. Robinson v. Central Nebraska Public Power & Irr. Dist., 146 Neb. 534, 20 N. W. 2d 509. In such case we have also said in effect that under appropriate circumstances and conditions a tenant could recover damages to his unmatured crops then growing on the land and damaged by the taking, as well as damages to his leasehold estate then existent. See, also, 20 C. J., Eminent Domain, § 245, p. 798; 29 C. J. S., Eminent Domain, § 173, p. 1042.

In that connection, section 76-711, R. S. Supp., 1953, provides, insofar as important here: "The condemner shall not acquire any interest in or right to possession of the property condemned until he has deposited with the county judge for the use of the condemnee the amount of the condemnation award in effect at the time the deposit is made. If no appeal is taken by the condemner from the award of appraisers, the condemner will be deemed to have accepted the award unless he has within sixty days from the date of the award filed an election in writing to abandon the proceeding. If the proceeding is abandoned, proceedings may not again be instituted by the condemner to condemn the property within two years from the date of abandonment."

In the light of the foregoing, it is logical to conclude, as we do, that an owner or tenant in possession of a farm who at the proper time, in due course of good husbandry and in good faith, plants a crop on the land after the petition for condemnation is filed but before condemner has deposited the award with the county judge or before condemner has by some binding election accepted the award, and such crop is growing but unmatured at the time of such deposit or election, may as of that time ordinarily recover damages for injury to or destruction of his share of the value of such crop in its then condition. 18 Am. Jur., Eminent Domain, § 256, p. 896. However, condemnee must establish the foregoing conditions by a preponderance of competent evidence which also meets the requirements as to measure of damages and sufficiency and clarity of proof to take it out of the realm of speculation for the purpose of submission to a jury within the meaning of relevant rules announced in Gledhill v. State, 123 Neb. 726, 243 N. W. 909; Snyder v. Platte Valley Public Power & Irr. Dist., 144 Neb. 308, 13 N. W. 2d 160, 160 A. L. R. 1154; Faught v. Platte Valley Public Power & Irr. Dist., 147 Neb. 1032, 25 N. W. 2d 889; Ricenbaw v. Kraus, 157 Neb. 723, 61 N. W. 2d 350.

Further, in State v. Platte Valley Public Power & Irr. Dist., 147 Neb. 289, 23 N. W. 2d 300, 166 A. L. R. 1196, this court held that: "If a leasehold interest is taken, or injured, the lessee is entitled to a sum which will restore the money loss consequent to the taking or injury. This consists generally of the fair market value of the leasehold or unexpired term of the lease, and is said to be the difference between the rental value of the remainder of the term and the rent reserved in the lease.

"Where the rent reserved equals or exceeds the rental value, the lessee has suffered no loss and cannot recover."

In that connection, defendant Thalken was erroneously

permitted, over objection by plaintiff, to testify as a mere conclusion that for abstract reasons, the taking damaged his lease $2,000, the exact amount which the jury permitted him to recover. We find no competent evidence in this record from which either a court or jury could have intelligently determined the fair market value of such defendant's leasehold for the unexpired term or the amount of rent actually reserved in the lease by which they could have intelligently arrived at the difference between them. Further, the instructions given by the trial court failed to fully, clearly, and intelligently state the applicable rule. In Borcherding v. Eklund, 156 Neb. 196, 55 N. W. 2d 643, we held: "A jury should be fully and fairly informed as to the various items of damages which it should take into consideration in arriving at its verdict. In this respect it is the duty of the trial court to instruct as to the proper basis upon which damages are to be assessed for each such item." See, also, Benedict v. Eppley Hotel Co., *ante* p. 23, 65 N. W. 2d 224. Thus, the jury was erroneously misled and permitted to speculate with regard to the damages allegedly sustained by defendant Thalken, and in that respect the verdict and judgment rendered thereon were not supported by competent evidence.

Defendants offered and the trial court admitted several photographs graphically depicting the topography of the land involved and its apparent tillability, particularly that land in the south tract adjacent to the rights-of-way upon which were several shocks of hay or grain. Defendants admitted, however, that such land had been flooded in 1929 and again in 1948. In that connection, after proper foundation was laid, plaintiff offered and the trial court refused to admit in evidence photographs, exhibits Nos. 7, 8, 9, 10, 11, 12, and 13, which graphically portrayed the complete flooding and inundation of such land in 1949. Plaintiff argued first that the exclusion was erroneous because such evidence was admissible as bearing upon the fair market value of the land.

We sustain that contention. In Wahlgren v. Loup River Public Power Dist., 139 Neb. 489, 297 N. W. 833, we held: "A party to an action in condemnation has a right to have all of the competent evidence of which he has availed himself on the question of damages submitted to a jury for consideration, and a failure of the trial court to allow its submission is reversible error." See, also, 29 C. J. S., Eminent Domain, § 273, p. 1260; 30 C. J. S., Eminent Domain, § 431, p. 164. That rule has application here.

On the other hand, plaintiff argued that such exhibits should have been admitted to establish that construction and maintenance of the dike by plaintiff operated as a special benefit. That contention has no merit. The general rule is that the burden of showing the damages which the landowner or lessee will suffer rests on him while the burden is on petitioner to show matters which tend to reduce or mitigate the damages. Rath v. Sanitary District No. One, 156 Neb. 444, 56 N. W. 2d 741. Further, we have held that condemnation is a special statutory proceeding and on appeal to the district court from an appraisement of damages in eminent domain cases, if other issues than the question of damages are involved, they must be presented by proper pleadings. Webber v. City of Scottsbluff, 155 Neb. 48, 50 N. W. 2d 533; Higgins v. Loup River Public Power Dist., 157 Neb. 652, 61 N. W. 2d 213. We have held that the proof must be confined to the issues made by the pleadings, and the charge to the jury must be confined to the issues made by the pleadings and supported by evidence. Perrine v. Hokser, 158 Neb. 190, 62 N. W. 2d 677; State v. County of Cheyenne, 157 Neb. 533, 60 N. W. 2d 593. By analogy, if on appeal to the district court a condemner claims special benefits, such issue must be appropriately pleaded and supported by competent evidence. In the case at bar, plaintiff neither pleaded nor offered any competent evidence as required from which it could be concluded that the dike operated as a special benefit.

See, Langdon v. Loup River Public Power Dist., 144 Neb. 325, 13 N. W. 2d 168.

The force and effect of instructions Nos. 10 and 13 given by the trial court was to direct the jury as a matter of law that the north and south tracts were one contiguous and continuous tract or unit used for a common purpose, and also that as a matter of fact defendants were entitled to recover damages in some amount to be determined by the jury to the entire remainder thereof by reason of severance of the 33.1 acres taken by plaintiff from the southern portion of the south tract. Plaintiff concedes as a matter of law and fact that defendants were entitled to severance damages in some amount determinable by the jury to the land remaining in the south tract, but denies that such tract and the north tract were one contiguous and continuous tract or unit, and cites McGinley v. Platte Valley Public Power & Irr. Dist., 133 Neb. 420, 275 N. W. 593, claiming that the north tract made the same contribution in the same manner after the taking as before, and was not damaged in any manner or amount by the taking from the southern portion of the south tract. In 29 C. J. S., § 140, p. 982, it is said: "To constitute a unity of property within the rule, there must be such a connection or relation of adaptation, convenience, and actual and permanent use as to make the enjoyment of the parcel taken reasonably and substantially necessary to the enjoyment of the parcels left, in the most advantageous and profitable manner in the business for which they are used. If the separate tracts of which a part of one is taken are not put to a joint use, they cannot be considered as one parcel in assessing damages to the land not taken, and this is especially true where the tracts are separated by a street, or a watercourse."

As recently as Rath v. Sanitary District No. One, *supra,* this court held: "One contiguous tract or unit is that which in general belongs to the same proprietor as that taken, and is continuous with it and used together for

a common purpose, whether or not the same is separated by platted or existing lines, lots, blocks, streets, alleys, or like divisions.

"Ordinarily in a condemnation proceeding it is a question of law whether or not the property involved constitutes one contiguous unit or tract, but where the doubt is factual, depending on conflicting evidence or on different views of the evidence, the court should submit the question to the jury under proper instructions.

"Where the property involved is one contiguous tract or unit, in estimating the damages occasioned by the appropriation of a part thereof for public use, the injury to the property remaining as well as the market value of the property actually taken should be considered, although the petition filed by the condemner for the appointment of appraisers only describes the property taken.

"The measure of damages for land taken for public use in such cases is the fair and reasonable market value of the land actually appropriated and the difference in the fair and reasonable market value of the remainder of the land before and after the taking."

We do find competent evidence in this record from which it could be reasonably concluded that the tracts north and south of the rights-of-way were one tract or unit used together for a common purpose. However, they were designated by name and description as separate tracts; and they were not physically contiguous because actually separated by both U. S. Highway No. 30 and the double track Union Pacific rights-of-way over which defendants testified that they crossed through a private gateway road. However, we find no evidence that they had any legal right to so cross the Union Pacific right-of-way. We find that not only defendants' direct examination but also their cross-examination and the testimony of other witnesses as well leaves a factual doubt depending upon conflicting evidence or different views of the evidence, whether or not

the two tracts were one contiguous tract or unit as heretofore defined. To set forth such evidence at length would not serve any purpose except to unduly prolong this opinion. It is sufficient for us to say that as in Rath v. Sanitary District No. One, *supra,* that question was one for determination by the jury under proper instructions, and a failure to so submit it herein was prejudicial error. See, also, Paulson v. State Highway Commission, 210 Iowa 651, 231 N. W. 296; Annotation, 6 A. L. R. 2d, § 13, p. 1222.

On the other hand, defendants adduced competent evidence from which it could have been reasonably concluded that plaintiff's taking from the south tract caused a diminution in value of the land remaining in the north tract, but plaintiff also adduced competent evidence from which it could have been reasonably concluded that there were no damages thereto caused by the taking. Therefore, the question of whether or not such lands remaining in the north tract were damaged and the amount thereof if any, as well as the amount of damages to land remaining in the south tract, were also separate questions for the jury, and when the trial court assumed as a fact by its instructions that there were damages to both and that defendants were entitled to recover same in some amount, that also was prejudicial error.

As held in McKain v. Platte Valley Public Power & Irr. Dist., 151 Neb. 497, 37 N. W. 2d 923: "It is the duty of the trial court, without request, to instruct the jury on each issue presented by the pleadings and supported by evidence.

"A litigant is entitled to have the jury instructed as to his theory of the case as shown by pleading and evidence, and a failure to do so is prejudicial error."

Also, in Langdon v. Loup River Public Power Dist., *supra,* this court held: "The purpose of an instruction is to furnish guidance to the jury in their deliberations, and to aid them in arriving at a proper verdict; and, with this end in view, it should state clearly and con-

cisely the issues of fact and the principles of law which are necessary to enable them to accomplish the purpose desired."

Other questions were presented and argued in briefs of counsel, but as we view it they require no discussion.

For reasons heretofore stated, we conclude that the judgment of the trial court should be and hereby is reversed and the cause is remanded for further proceedings in conformity with this opinion.

REVERSED AND REMANDED.

MARGARET YOUNG, APPELLANT, V. LA VERN STOETZEL ET AL., APPELLEES.

68 N. W. 2d 186

Filed January 21, 1955. No. 33622.

1. **Trial.** When a motion for a directed verdict is made, the party against whom it is directed is entitled to have his evidence accepted as true and to have all favorable inferences reasonably to be drawn therefrom resolved in his favor.
2. **Negligence: Trial.** In a case involving issues of negligence, where different minds may draw different conclusions or inferences from the evidence adduced, or, if there is a conflict in the evidence, the matter at issue must be submitted to the jury.
3. **Automobiles: Trial.** In order for physical facts to be sufficient to warrant a directed verdict in an automobile collision case, they must conclusively demonstrate that the collision out of which the injuries arose was not caused by any negligence on the part of the party making the motion.
4. **Trial.** Where there is a reasonable dispute as to what the physical facts show, the conclusions to be drawn therefrom are for the jury.

APPEAL from the district court for Lincoln County: ISAAC J. NISLEY, JUDGE. *Reversed and remanded.*

Maupin & Dent and *Harold W. Kay,* for appellant.

Baskins & Baskins, for appellees.

Heard before SIMMONS, C. J., CARTER, MESSMORE, YEAGER, WENKE, and BOSLAUGH, JJ.

CARTER, J.

This is an action by a passenger in an automobile against the driver and owners of a passenger bus to recover damages for personal injuries sustained in a collision between the two vehicles at a street intersection. The trial court directed a verdict against plaintiff and plaintiff appeals.

The collision occurred at the intersection of Willow and Fourth Streets in North Platte, Nebraska, on July 1, 1952, at about 6:45 a. m. Willow Street runs north and south and is 47.5 feet wide from curb to curb. Fourth Street runs east and west and is 46.5 feet wide from curb to curb. Fourth Street is a through street protected by stop signs.

The evidence shows that plaintiff was riding in an automobile owned and driven by her husband. Plaintiff's mother was riding in the front seat on the right side and plaintiff was riding in the front seat between her husband and her mother. For convenience we shall refer to plaintiff's husband as Young. Immediately prior to the collision they were proceeding north on Willow Street. The evidence of plaintiff and her witnesses is that they stopped at the stop sign on the south side of Fourth Street. Plaintiff and her husband testified that they looked to the right and saw no traffic coming from the east. They proceeded into the intersection at about 5 miles per hour and moved 7 or 8 feet into the intersection when plaintiff said: "Watch out for the bus." Young stopped the car immediately with the front end at the center of Fourth Street.

Plaintiff says that the bus was about one-half block away when she first saw it. Young says it was about 100 feet east from the intersection when he first saw it. Plaintiff and Young testify that the bus was coming quite fast and appeared to be picking up speed as it

approached them. Young estimates the speed of the bus when he first saw it at 35 miles an hour and at 40 miles an hour at the time of the collision. Plaintiff and Young testify that the bus was traveling in the center of the road. They state that the north half of Fourth Street was open for the bus to pass through the intersection, but for some reason it continued in the center of the road and crashed into the side of their stopped car.

After the collision the automobile was partly over the curb, facing south, a few feet north of the northwest corner of the intersection. The bus was almost wholly over the curb, facing northwest, a few feet west of the northwest corner of the intersection. There is evidence that mud, glass, and other debris were found in the northeast quadrant of the intersection. There is also evidence of similar debris being found in the east half of the intersection. The pictures received in evidence indicate also that there was similar debris in the northwest quadrant of the intersection. Young testified to a whirling sensation when their car was hit by the bus. There is evidence by a witness two or three blocks to the south, who was driving north on Willow Street, that the bus appeared to swerve to the north and over the north curb. The theory of plaintiff's case, briefly summarized, is that Young drove his car into the intersection, saw the bus coming down the center of Fourth Street, stopped his car south of the center line of Fourth Street, and was hit by the bus when it was traveling partly or wholly on the south side of the center line of the street.

The evidence of the defendant driver is that the bus was at all times on its right side of the street. The driver of the bus testified that he was driving west on Fourth Street. He was driving at approximately 18 miles an hour 100 feet east of the intersection. At a point 80 feet east of the intersection he looked to the right and left and saw no traffic. He did not see the

automobile until immediately before the collision. He states that he could see the stop sign on Willow Street and the area around it from a distance of 135 feet east of the intersection. His vision on Willow Street increased as he approached the intersection. He did not apply his brakes nor disengage the clutch because he had no time to do so. His evidence is that the collision occurred in the northeast quadrant of the intersection. The undisputed physical facts testified to were not such as to control the result. The driver of the bus says that the automobile was struck on its right side, a fact which is supported by pictures of the automobile received in evidence.

The defendants assert the plaintiff's evidence as to the speed of the bus and the distance it traveled, when considered with her evidence of the speed of the automobile and the distance it traveled, shows that no collision could have occurred or that it could not have occurred in the manner disclosed by the record. We point out, however, that speed was not an essential element of plaintiff's case. She asserts that her husband drove his car into the intersection, stopped short of the center line of the street, and was hit by the bus while his car was in a standing position. If the jury found this evidence to be true, the calculations of speed and distance would not be controlling. The fact that the automobile was stopped for some period of time clear of the lane of travel of the bus eliminates the question of speed as a controlling factor in plaintiff's case. Such evidence is proper for the consideration of the jury, but is not sufficient to sustain a judgment against the plaintiff as a matter of law.

The material evidence is in conflict. If the evidence of plaintiff and Young is believed by the jury, it is sufficient to sustain a verdict for the plaintiff. Likewise, if the evidence of defendants' witnesses is believed, it is sufficient to sustain a verdict for the defendants.

Under such circumstances the evidence presents a question for the jury to determine.

When a motion for a directed verdict is made, the party against whom it is directed is entitled to have his evidence accepted by the court as true and to have all favorable inferences reasonably to be drawn therefrom resolved in his favor. Segebart v. Gregory, 156 Neb. 261, 55 N. W. 2d 678.

In a case involving issues of negligence, where different minds may draw different conclusions or inferences from the evidence adduced, or if there is a conflict in the evidence, the matter at issue must be submitted to the jury; but where the evidence is undisputed, or but one reasonable inference or conclusion can be drawn from the evidence, the question is one of law for the court. Kuska v. Nichols Construction Co., 154 Neb. 580, 48 N. W. 2d 682.

In order for physical facts to control a verdict in a personal injury action they must conclusively demonstrate that a verdict is required as a matter of law. It is only where undisputed physical facts conclusively establish the negligence of one party or the nonnegligence of the other that they afford a proper basis for a directed verdict. Where the physical facts and the inferences to be drawn therefrom are subject to more than one interpretation with respect to the negligence of the parties, they are not sufficient to sustain a directed verdict. Hessler v. Bellamy, 128 Neb. 571, 259 N. W. 514; Schwarz v. Fast, 103 F. 2d 865. Under the latter circumstances they constitute evidence which a jury may properly consider in arriving at a verdict. Shiers v. Cowgill, 157 Neb. 265, 59 N. W. 2d 407.

We conclude that the physical facts shown by the record are not such as would sustain a directed verdict for the defendants. It appears also that the testimony of the witnesses was in conflict as to whose negligence was the cause of the accident. The evidence does not point to any negligence on the part of the plaintiff who

was a guest in her husband's car. Under such circumstances the trial court erred in directing a verdict for the defendants.

The judgment is reversed and the cause remanded for further proceedings in accordance with this opinion.

REVERSED AND REMANDED.

CHAPPELL, J., participating on briefs.

PETERSEN & PETERSEN, INC., ET AL., APPELLANTS, V. WEST NEBRASKA EXPRESS, INC., APPELLEE.

68 N. W. 2d 189

Filed January 21, 1955. No. 33628.

1. **Public Service Commissions: Pleading.** Failure or refusal of complainant to comply with a proper order of the Nebraska State Railway Commission with respect to the amendment of a complaint may be a valid ground for a dismissal of the proceeding.
2. ———: ———. An order of the Nebraska State Railway Commission requiring a complainant to allege facts showing whether or not shipments of commodities were in interstate or intrastate commerce is not unreasonable when the jurisdiction of the commission is dependent thereon.

APPEAL from the Nebraska State Railway Commission. *Affirmed.*

J. Max Harding, Einar Viren, and *R. E. Powell,* for appellants.

Russell E. Lovell, for appellee.

Heard before SIMMONS, C. J., CARTER, MESSMORE, YEAGER, CHAPPELL, WENKE, and BOSLAUGH, JJ.

CARTER, J.

This is an appeal from an order of the Nebraska State Railway Commission by which the commission dismissed a formal complaint filed by the appellants against the appellee without affording appellants an opportunity to be heard thereon.

On November 10, 1953, Petersen & Petersen, Inc., Sullivan Transfer and Storage Company, Arrow Freight Lines, and Red Ball Transfer Company, the appellants, each of whom held certificates of public convenience and necessity issued by the commission, filed a complaint with the commission alleging that West Nebraska Express, Inc., the appellee, was engaged in certain operations in violation of the authority granted to it by the commission. The prayer of the complaint was for an order of the commission directing and requiring appellee to immediately cease and desist from such violations of the statutes of Nebraska, the rules of the commission, and the terms of its certificate of public convenience and necessity.

The appellee, on November 19, 1953, filed a motion to make the complaint more definite and certain. The motion was sustained after oral argument thereon on November 28, 1953. On February 16, 1954, appellants filed an amended complaint. On March 6, 1954, appellee filed a motion to make the amended complaint more definite and certain and to strike certain parts of the amended complaint, and, for failure to comply with the order of the commission, that the complaint be dismissed. On April 12, 1954, after oral argument of the motion, the commission sustained the motion to strike and directed appellants to file a second amended complaint on or before April 23, 1954. On April 20, 1954, appellants filed an answer to the commission's order of April 12, 1954, the effect of which was a refusal to comply with such order and to stand on the amended complaint. The appellee thereupon filed a motion to dismiss the amended complaint because of appellants' refusal to comply with the order of the commission. On April 30, 1954, the motion to dismiss the amended complaint was sustained by the commission, and the appellants appealed.

The only question to be decided is whether or not the

commission properly required the appellants to file a second amended complaint.

The complaint was filed under the provisions of section 75-411, R. R. S. 1943. In substance this section provides that any person, firm, corporation, or association complaining of anything done or omitted to be done by any common carrier relative to the control and regulation of common carriers under which the commission has authority to act, may apply to the commission for its correction. In the handling of complaints under the foregoing section the commission is authorized to adopt rules and regulations to govern its proceedings. §§ 75-107, 75-109, 75-225, R. R. S. 1943. Pursuant to the authority thus granted, the commission adopted rule 3.1, Rules of Practice and Procedure before the Nebraska State Railway Commission, which in part provides: "The complaint shall be drawn so as to advise fully and completely the parties defendant and the Commission wherein the provisions of the law or the rules, regulations, or orders of the Commission have been or are being violated. The complaint shall set forth concisely and in plain language the facts claimed to constitute such violations and the relief sought."

The portions of the amended complaint which are pertinent to the present appeal are those contained in paragraphs 6 and 8. In paragraph 6 it is alleged in part: "West Nebraska Express, Inc., is at the present time and for some time past has been engaged in the transportation of various commodities, including the transportation of loaded rocket shells (ammunition) moving between the Cornhusker Ordnance Plant at or near Grand Island, Nebr. and the Sioux Ordnance Depot located at or near Sidney, Nebraska." In paragraph 8 it is alleged in part: "West Nebraska Express, Inc., has also been engaged in the movement of traffic, which so far as this defendant is concerned, originates at Omaha, Nebr., and is destined to Cornhusker Ordnance Plant at or near Grand Island, Nebr., and the Sioux Ordnance Depot at

or near Sidney, Nebr., all of which traffic has moved under Government bills of lading, and which traffic consists of various types of explosives and other commodities used in the manufacture of projectiles or shells, all of which movement of traffic is beyond the scope of the operating authority issued to this defendant by order of this Commission, and further is in violation of the policies, rules and regulations of this Commission."

The motion to make more definite and certain specifically requests that appellants be required to set forth whether said shipments referred to in the amended complaint were of an interstate or intrastate nature. The order of the commission required appellants to comply with this request. It is the contention of the appellants that they have pleaded all that is required and that the action of the commission in dismissing their amended complaint was arbitrary.

The parties concede that if the shipments of the specified commodities were interstate in character the Interstate Commerce Commission is the proper forum in which the complaint should be filed and that the Nebraska State Railway Commission would be without jurisdiction of the subject matter. On the other hand, if such shipments were intrastate in their nature, the commission would have exclusive jurisdiction to hear and determine the complaint.

The allegations of the amended complaint hereinbefore quoted contain all the facts pleaded with reference to this point. It will be noted that the allegations of paragraph 6 state only that appellee has been engaged in the transportation of commodities moving between the Cornhusker Ordnance Plant and the Sioux Ordnance Depot. Whether or not such shipments were interlined between the stated points as a part of an interstate shipment is not set forth; nor are facts alleged which show that such shipments were intrastate in nature. The amendment of paragraph 6 is not in compliance with the commission's order.

With reference to paragraph 8 the appellants allege that "West Nebraska Express, Inc., has also been engaged in the movement of traffic, which so far as this defendant is concerned, originates at Omaha, Nebr., and is destined to Cornhusker Ordnance Plant at or near Grand Island, Nebr., and the Sioux Ordnance Depot at or near Sidney, Nebr., * * *." It cannot be determined from this allegation whether or not the traffic referred to is interstate or intrastate. The words "so far as this defendant is concerned" eliminate the inference that might be otherwise drawn that the traffic was intrastate. The pleading is not a compliance with the commission's order.

It is a fundamental rule of pleading that facts must be alleged in a petition showing jurisdiction of the subject matter in a tribunal of limited jurisdiction. A court or tribunal of limited jurisdiction in this state which requires the filing of formal pleadings is not required to hear matters in which it does not appear affirmatively by the pleadings, not only that a cause of action has been stated, but also that such court or tribunal has jurisdiction of the subject matter.

In the case before us, appellants were required to plead facts sufficient to show that the commission had jurisdiction of the subject matter of the complaint. The specific question as to whether or not the shipments were intrastate or interstate was raised. They elected not to comply with the order made. Under such circumstances the commission is empowered to take proper steps to enforce its order.

The commission has power to dismiss a complaint without prejudice for failure of the complainant to comply with rules of pleading and orders relating thereto. While the power should be sparingly used, its exercise is entirely proper where the pleader elects to disregard the order of the commission and to stand on the complaint as filed. It is only where such a complaint is dismissed without reasonable cause that this court will

reverse the action of the commission. The appellants had every opportunity to comply with the commission's order with full knowledge of its requirements. Under such circumstances the commission pursued the only course which was left open to it. Ferson v. Armour & Co., 109 Neb. 648, 192 N. W. 125; Bushnell v. Thompson, 133 Neb. 115, 274 N. W. 453. We find no error in the record.

AFFIRMED.

COUNTY OF SCOTTS BLUFF, NEBRASKA, APPELLEE, V. MARTIN BRISTOL ET AL., APPELLEES, IMPLEADED WITH CARL MACKRILL, PURCHASER, APPELLANT.

68 N. W. 2d 197

Filed January 21, 1955. No. 33653.

1. **Judgments.** A court of general jurisdiction has inherent power to vacate an adjudication made by it in a civil case at any time during the term of court in which it was made.
2. **Judgments: Appeal and Error.** The exercise of authority to vacate an adjudication made by a court of general jurisdiction in a civil case during the term of the court in which it is made is a matter of legal discretion. The court is limited by the facts shown for relief from the adjudication. An abuse of discretion may be corrected by an appellate court.
3. **Judicial Sales.** It is the duty of the district court to determine whether an amount bid for property offered at a judicial sale is a fair value of it under the conditions and circumstances of the sale or whether a greater amount would be realized by a subsequent sale of the property.
4. **Taxation.** Section 77-1914, R. R. S. 1943, defines the nature and extent of the title passed to a purchaser and evidenced by deed of a sheriff resulting from foreclosure of a lien of general taxes on real estate. It does not affect or limit the power of a court of general jurisdiction.

APPEAL from the district court for Scotts Bluff County: CLAIBOURNE G. PERRY, JUDGE. *Affirmed.*

Herman & Van Steenberg, for appellant.

Mothersead, Wright & Simmons, Cline, Williams, Wright & Johnson, Hans, J. Holtorf, R. S. Wiles, and *O. C. Adcock,* for appellees.

Heard before CARTER, MESSMORE, YEAGER, CHAPPELL, WENKE, and BOSLAUGH, JJ.

BOSLAUGH, J.

The real estate affected by this litigation is definitely described in the fifth cause of action stated in the petition. It was sold by virtue of a decree of the district court which foreclosed a lien thereon for delinquent general taxes and delinquent special assessments. The sale was confirmed. The real estate was conveyed to Carl Mackrill, the purchaser at the sale, by deed of the sheriff and it was recorded in the office of the register of deeds.

Thereafter, but before adjournment of the term of court in which the decree of confirmation was rendered, Katherine Schwartzkopf, one of the defendants, by motion filed in the case asked that the order of confirmation be vacated; that the deed from the sheriff to the purchaser be canceled; and that Katherine Schwartzkopf, Clara Green, and Helen Herbel be given a reasonable time to redeem the premises from the decree of foreclosure. The ground for the relief sought was that the title to the real estate was conveyed to Katherine Schwartzkopf, guardian of Clara and Helen Schwartzkopf, August 8, 1942; that Clara and Helen Schwartzkopf were then minors; that they are now of age; that the name of the former is Clara Green and the name of the latter is Helen Herbel; that they are and have been since September 1953, residents and inhabitants of Scotts Bluff County, Nebraska; that no service of summons was had upon either of them; that Katherine Schwartzkopf was served only as guardian of Clara and Helen Schwartzkopf; and that on the date of the summons so served no such guardianship existed.

The purchaser opposed the relief sought by the motion

at the hearing held thereon. The district court found that the statements made in the motion were true, sustained the motion, vacated the confirmation, set aside the deed of the sheriff to Carl Mackrill for the real estate referred to above, quieted the title thereto against the deed, and gave Katherine Schwartzkopf, Clara Green, and Helen Herbel 20 days within which to redeem the premises.

The parties to this appeal are Carl Mackrill, designated hereafter as appellant, and Katherine Schwartzkopf, identified herein as appellee.

Appellant says the court was wrong in finding that the service of summons made on appellee was insufficient to confer jurisdiction over her. Appellee paid to the clerk of the district court, within the time allowed her, the amount required to redeem the real estate from the decree of foreclosure. This fact and the conclusion herein stated make it improper and unnecessary to determine the validity of the service made upon appellee.

The district court had authority to vacate the order of confirmation, cancel the deed to the purchaser, and permit appellee to redeem the real estate from the decree of foreclosure. A court of general jurisdiction has inherent power to vacate an adjudication made by it in a civil case at any time during the term of court in which it was made. Barney v. Platte Valley Public Power & Irr. Dist., 147 Neb. 375, 23 N. W. 2d 335; Benson v. General Implement Corporation, 151 Neb. 234, 37 N. W. 2d 223. The exercise of the authority to vacate an adjudication made by a court of general jurisdiction in a civil case during the term of the court in which it is made is a matter of legal discretion. The court is limited by the facts shown for relief from the adjudication and an abuse of discretion may be corrected by an appellate court. Barney v. Platte Valley Public Power & Irr. Dist., *supra;* Benson v. General Implement Corporation, *supra.*

The record indicates that appellee is a person of limi-

tations and restricted mental alertness. She is a widow and lives in a small house without modern conveniences upon the real estate involved. The officer delivered her a copy of the summons issued for service upon her. She read it and learned that she was required to do something by November 30, 1953. She was asked: "And you did nothing about it at all?" She answered: "Yes. I come over and paid it." She could not name the person to whom or the office in which she made payment in some amount but she described it this way: "Well, it was right here by the Sheriff's office in that room there." What she then paid were taxes on personal property. She took no other action to satisfy the foreclosure action. The sale of the property was confirmed as a default matter. The offer of the purchaser was $20. The record contains evidence, not disputed, that the value of the property was not less than $1,500. It was proper for the trial court to conclude that the property did not sell for its fair value, and that the amount bid at the sale was inadequate. If it had been advised of the facts when confirmation was requested it would have been the duty of the court to have refused approval of the sale. § 25-1531, R. R. S. 1943; Ehlers v. Campbell, 147 Neb. 572, 23 N. W. 2d 727. It was not an abuse of discretion for the court to vacate the confirmation of a judicial sale that it would not have been legally authorized to have approved if the facts had been known to it at the time of the confirmation.

Appellant argues that the district court had no authority, discretionary or otherwise, to grant appellee the relief she sought by her motion because of the fact that this is a foreclosure case, and that section 77-1914, R. R. S. 1943, contains the following: "The delivery of the sheriff's deed shall pass title to the purchaser, free and clear of all liens of every nature whatsoever and the interest or interests of all persons over whom the court had jurisdiction." This statute defines the nature and extent of the title passed to a purchaser and evidenced

by a deed of the sheriff resulting from the foreclosure of a lien for general taxes on real estate. It does not affect or limit the power of a court of general jurisdiction. Appellant mentions two cases to sustain his contention, Polenz v. City of Ravenna, 145 Neb. 845, 18 N. W. 2d 510, and Dent v. City of North Platte, 148 Neb. 718, 28 N. W. 2d 562. His conclusion in this regard is not justified by the statute or the cases relied upon.

The judgment of the district court should be and it is affirmed.

AFFIRMED.

HOWARD DULANEY MITCHELL, PLAINTIFF IN ERROR, V. STATE OF NEBRASKA, DEFENDANT IN ERROR.

68 N. W. 2d 184

Filed January 21, 1955. No. 33664.

1. **Criminal Law: Coram Nobis.** The purpose of a writ of error coram nobis is to enable the court to recall some adjudication, made while some fact existed which, if before the court, would have prevented rendition of the judgment, and which, through no fault of the party, was not presented.
2. **Appeal and Error.** In the absence of a bill of exceptions, it will be presumed in this court that any issue of fact in the case proper for the trial court to consider was correctly determined, and the judgment rendered will be affirmed if the pleadings state a cause of action or a defense and support the judgment.
3. **Judgments.** All presumptions exist in favor of the regularity and correctness of judgments of courts of general jurisdiction, and he who asserts the contrary is required to establish the alleged defect or error by an exhibition of the record in the manner provided by law.

ERROR to the district court for Box Butte County: EARL L. MEYER, JUDGE. *Affirmed.*

Howard Dulaney Mitchell, pro se.

Clarence S. Beck, Attorney General, and *Robert V. Hoagland,* for defendant in error.

Heard before SIMMONS, C. J., CARTER, MESSMORE, YEAGER, CHAPPELL, WENKE, and BOSLAUGH, JJ.

BOSLAUGH, J.

Plaintiff in error pleaded guilty to three charges of obtaining money and property by false pretenses and admitted facts sufficient to establish that he was an habitual criminal within the meaning of the law of Nebraska. He was June 22, 1951, adjudged to be confined in the Nebraska State Penitentiary. He has since shortly thereafter been detained therein in service of the sentence imposed upon him.

Plaintiff in error filed a petition for a writ of error coram nobis in the district court November 25, 1952. The ground asserted by him for avoiding the judgment of conviction and sentence was the violation of his constitutional rights through failure, without his competent waiver or default, to have effective assistance of counsel in the case in which he was charged, convicted, and sentenced. The defendant in error by answer joined issue with the plaintiff in error. A trial was had and the district court denied and dismissed the petition of plaintiff in error.

The substance of the contentions made by plaintiff in error in this court is that the attorneys employed to represent him in the criminal case did not faithfully, competently, and effectively assist him; that the Sixth Amendment to the Constitution of the United States guarantees to the defendant in a criminal case the effective assistance of counsel; that plaintiff in error was disabled to the degree that he was unable to understand the nature or effect of the proceedings had at the time he acknowledged guilt of the charges made against him by the State; and that the decision and judgment are contrary to the evidence. A determination of any of these contentions would require an examination of the evidence produced at the trial in the district court. A sufficient application for a writ of error coram nobis inherently presents a question of fact. Coram nobis was available at common law to correct an error of fact. If a judgment was erroneous in a matter of fact only it

could be reversed in the same court by a writ of error coram nobis. This is recognized by this court. In Hawk v. State, 151 Neb. 717, 39 N. W. 2d 561, it is said: "The purpose of a writ of error coram nobis is to enable the court to recall some adjudication, made while some fact existed which, if before the court, would have prevented rendition of the judgment, and which, through no fault of the party, was not presented." See, also, United States v. Morgan, 346 U. S. 502, 74 S. Ct. 247, 98 L. Ed. 477.

A review of any of the alleged errors would require a consideration of evidence produced at the trial. There is no bill of exceptions. In the absence of a bill of exceptions any question of fact determined by the district court may not be reviewed in this court, and no question will be considered, a determination of which necessitates an examination of the evidence produced in the trial court. When the record shows such a situation, it is presumed that any issue of fact which it was proper for the trial court to consider and decide was sustained by evidence and was correctly determined, and the judgment will be affirmed if the pleadings state a cause of action or a defense and support the judgment rendered. All presumptions exist in favor of the regularity and correctness of the judgments of courts of general jurisdiction, and he who asserts the contrary is required to establish the alleged defect or error by an exhibition of the record in the manner provided by law. Bryant v. State, 153 Neb. 490, 45 N. W. 2d 169; Higgins v. Loup River Public Power Dist., 157 Neb. 652, 61 N. W. 2d 213; Taylor v State, *ante* p. 210, 66 N. W. 2d 514. The answer of defendant in error states a defense and supports the judgment in this case.

The judgment of the district court should be and it is affirmed.

AFFIRMED.

STATE OF NEBRASKA, PLAINTIFF IN ERROR, V. HENRY C. LUTTRELL, DEFENDANT IN ERROR.

68 N. W. 2d 332

Filed January 28, 1955. No. 33708.

1. **Highways.** The power of the Legislature to regulate public highways and their use inheres not only in its authority to provide, maintain, and control them, but also in the police power of the state which it is the province of the Legislature to exercise in appropriate circumstances.
2. ———. The right to use public highways for purposes of travel is not an absolute and unqualified one. It may be restricted and controlled by the Legislature in the interest of the safety and general welfare of the public by reasonable and nondiscriminatory regulations.
3. **Highways: Automobiles.** The limitation of the weight of a vehicle and its cargo propelled over a public highway is a proper subject for the exercise of the police power of the state.
4. **Statutes.** In the consideration and application of a statute effect should be given, if possible, to all of its parts and nothing should be avoided. The subject of the enactment and the language thereof in its plain, ordinary, and popular sense should be considered to determine the legislative will.
5. ———. It is the duty of the court, so far as practicable, to give effect to the entire language of a statute and to reconcile the different provisions of it so they are consistent, harmonious, and sensible.
6. **Statutes: Automobiles.** The meaning of subsection (4) of section 39-722, R. S. Supp., 1953, is that the maximum weight that may lawfully be imposed on the highway by any 2 or more consecutive axles of a vehicle or a combination of vehicles if the distance between the extreme axles of the 2 or more consecutive axles is 22 feet or less may not exceed that stated for the respective distance in the table which is a part of the subsection.
7. ———: ———. The word "group" in the subsection referred to above means any 2 or more consecutive axles of a vehicle or combination of vehicles where the distance between the extreme axles of the 2 or more consecutive axles is 22 feet or less.
8. ———: ———. The statute or any part of it is not vague, uncertain, or ambiguous because of the words in subsection (4) "group of two or more consecutive axles" followed in the same sentence by "the extreme axles of said two or more consecutive axles," and the language in subsection (5) "When the distance

between the extreme of any two or more consecutive axles or group of axles * * *."

ERROR to the district court for Lincoln County: JOHN H. KUNS, JUDGE. *Exceptions sustained.*

Clarence S. Beck, Attorney General, *Ralph D. Nelson,* and *James G. McIntosh,* for plaintiff in error.

Rush C. Clarke and *John P. O'Brien,* for defendant in error.

Robert E. Powell, amicus curiae.

Heard before SIMMONS, C. J., CARTER, MESSMORE, YEAGER, CHAPPELL, WENKE, and BOSLAUGH, JJ.

BOSLAUGH, J.

Henry C. Luttrell, called defendant herein, was charged in the district court with operating an overloaded vehicle on the highways in Lincoln County. The trial to the court without a jury, by stipulation of the parties, resulted in a finding and judgment that defendant was not guilty of the charge against him and that he should be and was discharged. The county attorney and the Attorney General excepted to the decision and by this proceeding challenge its correctness as they are authorized to do by statute with the permission of this court. §§ 29-2314, 29-2315, R. R. S. 1943; State v. McDaniels, 145 Neb. 261, 16 N. W. 2d 164; State v. Hutter, 145 Neb. 798, 18 N. W. 2d 203. The function of this court is to determine the law of the case. It may not affect the judgment of the district court. § 29-2316, R. R. S. 1943; State v. McDaniels, *supra.*

The substance of the accusation made by plaintiff in error, hereafter called the State, was that at a time stated defendant operated a freight-carrying motor vehicle upon the public highways in Lincoln County on which the distance between the extreme axles of a group of 2 or more consecutive axles was 18 feet, and the total gross weight with load imposed on the highway by the

group of axles was more than 5 percent in excess of 42,080 pounds or 49,280 pounds.

A stipulation of the parties and a drawing or sketch offered by the State and admitted without objection constitute the evidence. The sketch of the combination vehicle concerned in this litigation is reproduced herein that the statements of fact contained in the stipulation and the comments in the opinion concerning them may be more readily understood.

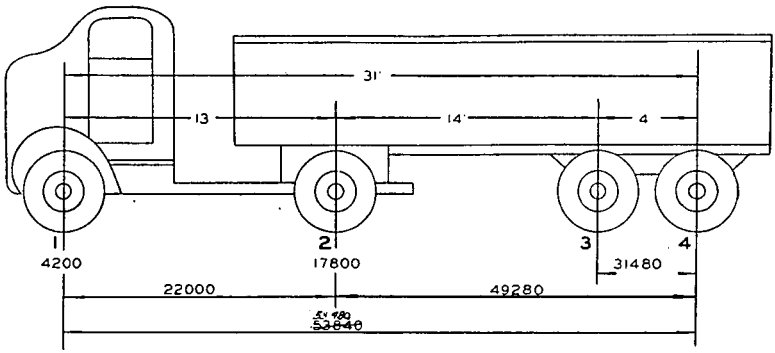

The facts stated in the stipulation are: That defendant at the time named in the complaint operated a freight-carrying motor vehicle on the public highways in Lincoln County; that the sketch represents the appearance in profile of the truck operated by defendant, shows the distances between the axles of the truck, the amount of weight then carried by each axle and on each group of axles of the truck, the location of the wheels on the left side of the tractor and semitrailer, and the centers of the wheels represent the correct location of the axles of the truck; that the figures 13, 14, 4, and 31 in the upper part of the sketch correctly represent the distance in feet between the various axles; that the numbers 1, 2, 3, and 4 indicate the numbers of the axles as designated by the person who prepared the sketch; that the other figures on the sketch in hundreds and thousands of pounds at the lower part thereof represent

the weight in pounds imposed upon the highway by the load of the truck upon the several axles and upon the combination of the several axles; and that the figure 53,480, nearest the bottom of the sketch, represents the total gross weight of the tractor and semitrailer operated by the defendant at the time stated in the complaint and the load it then carried.

Section 39-722, R. S. Supp., 1953, contains the following:

"(2) No wheel of a vehicle or trailer * * * shall carry a gross load in excess of nine thousand pounds, nor shall any axle carry a gross load in excess of eighteen thousand pounds. * * *

"(3) Every vehicle whether operated singly or in a combination of vehicles, and every combination of vehicles must comply with subsections (2), (4), and (5) of this section. The limitations imposed by this section are supplemental to all other provisions imposing limitations upon the size and weight of vehicles.

"(4) The total gross weight with load imposed on the highway by any group of two or more consecutive axles of a vehicle or of a combination of vehicles where the distance between the extreme axles of said two or more consecutive axles is twenty-two feet or less, shall not exceed that given for the respective distance in the following table:

"Distance in feet between the extremes of any group of axles	Maximum load in pounds carried on any group of axles
4	32,000
* * *	
18	42,080
* * *	
22	45,700

"(5) When the distance between the extreme of any two or more consecutive axles or group of axles is more than twenty-two feet, the total gross weight with load

imposed on the highway by any vehicle or combination of vehicles where the distance between the first and last axles is more than twenty-two feet shall not exceed that given for the respective distances in the following table:

"Distance in feet Maximum load in pounds

* * *

31 . . . . . 53,490 * * *."

The conceded facts are that defendant was at the time stated in the charge operating a freight-carrying motor vehicle consisting of a semitrailer and tractor combination on the public highways in Lincoln County. The vehicle had 4 axles numbered on the sketch from the front to the rear as 1, 2, 3, and 4. The distance between the axles was as follows: Between axles 1 and 2, 13 feet; between axles 2 and 3, 14 feet; between axles 3 and 4, 4 feet; and the distance between axles 1 and 4, 31 feet. The gross weight of the load on the several axles expressed in pounds was as follows: Axle 1, 4,200; axle 2, 17,800; axles 3 and 4, 31,480; and axles 2, 3, and 4, 49,280. The gross weight on the 4 axles, that is, the weight of the vehicle and the load, was 53,480 pounds.

The court found specifically that subsection (4) of section 39-722, R. S. Supp., 1953, quoted above, was unconstitutional because it was vague and uncertain, deprived persons of liberty and property without due process of law, and deprived persons accused thereunder of the right to know and demand the nature and cause of the accusation contrary to the provisions of the Constitution of Nebraska. The court also found that the complaint did not state facts sufficient to constitute a violation of the law of Nebraska.

The object of the statute is to establish a weight limitation on the gross weight with load imposed on the highway by any group of 2 or more consecutive axles of a vehicle or a combination of vehicles. The specifica-

tions of the restriction are that the maximum load permitted is determined by the distance between the extreme axles of any group of 2 or more consecutive axles. Subsection (4) of the statute designates these distances in feet from 4 feet to 22 feet. The meaning of this subsection is not obscure or doubtful. The group it speaks of is any group of 2 or more consecutive axles of a vehicle or a combination of vehicles. The distance necessary to know is the distance in feet between the extreme axles of a group of axles. The weight in any instance is designated in pounds. This is a formula the elements of which are any group of not less than 2 consecutive axles of a vehicle or a combination of vehicles with an over-all distance of not more than 22 feet between the extreme axles of the group and a statutory table that specifies the maximum pounds that may be carried on any group of consecutive axles. This subsection is concerned solely with the maximum weight on any 2 or more consecutive axles of a vehicle or a combination of vehicles operating on a highway where the extreme axles of the group are not more than 22 feet from each other. The effect of the legislation is to impose a new and additional limitation on the weight that may be placed upon the highway by consecutive axles within relatively close proximity to each other. It is reasonably clear that the Legislature in adopting the restriction of this subsection considered the distribution or spacing of axles of vehicles the major factor regarding weight on the highway.

The application of the provisions of the subsection to the admitted facts is not difficult. The defendant was operating a motor vehicle upon a public highway. It had 4 axles. The 3 of them nearest the rear of the vehicle numbered 2, 3, and 4 on the sketch were consecutive axles. They were a group of axles and the distance between the extreme axles of the group, that is, between axle 2 and 4, was 18 feet. The table of the

subsection provides that if the distance in feet between the extreme axles of any group of axles is 18 feet the maximum load that may be carried on the axles of the group is 42,080 pounds. A tolerance of 5 percent of the load is permitted on any group of axles. § 39-723.03, R. S. Supp., 1953. Therefore the load defendant was permitted to have on the group of axles, 2, 3, and 4, was 42,080 pounds, the maximum stated in the table, and the allowed tolerance or a total of 44,184 pounds. The total gross weight with load imposed by this group of axles was 49,280 pounds. The overload on the designated group of axles on the truck was 5,096 pounds. However, the overload for the purposes of this case was 7,200 pounds because the statute permitting a tolerance states that if a load exceeds the maximum allowed by the table and the tolerance the defendant must be penalized on the weight in excess of the load permitted by the table. § 39-723.03, R. S. Supp., 1953.

Defendant insists that the vice of the statute is in the word group; that the axles of the tractor and semi-trailer constitute a group, and the first and last axles of this group are extreme axles and in consequence he was not guilty of the charge made or that the word group as used in the statute is so variable and indefinite in its meaning that it cannot be known what its meaning is; that it leaves the matter in conjecture and speculation; and that it cannot be determined from the statute what is and what is not against the law. Defendant seems also to find ambiguity and indefiniteness because subsection (4) of the statute speaks of "Any group of two or more consecutive axles" and later in the same sentence refers to "the extreme axles of said two or more consecutive axles," and subsection (5) of the statute contains the language "When the distance between the extreme of any two or more consecutive axles or group of axles * * *." The meaning of the word group in subsection (4) of the statute is clearly indicated by

the language therein "any group of two or more consecutive axles of a vehicle or of a combination of vehicles." The two subsections (4) and (5) of the statute relate to separate and distinct situations. The former is concerned with the maximum load carried on any group of 2 or more consecutive axles when the distance in feet between the extremes of the group is not more than 22 feet. The latter relates to the total gross weight with load imposed on the highway by any vehicle or combination of vehicles when the distance between the extreme of any 2 or more consecutive axles or group of axles is more than 22 feet but does not exceed 45 feet, and where the distance between the first and last axles is more than 22 feet.

State v. Balsley, 242 Iowa 845, 48 N. W. 2d 287, considered the following language of a statute of that state: " 'No group of axles of any vehicle, or any combination of vehicles, shall carry a load in pounds in excess of the value given in the following table corresponding to the distance in feet between the extreme axles of the group measured longitudinally to the nearest foot * * *'." This was followed by a table similar to the table in subsection (4) of section 39-722, R. S. Supp., 1953. The opinion of the Iowa court contains this pertinent language: "A group of axles of a vehicle must necessarily mean some combination of axles in the vehicle other than both 'extreme axles' of a combination vehicle or the 'tandem axles.' Webster's New International Dictionary (Second Edition—1944) defines the word 'group', in part, as follows: 'An assemblage of persons or things regarded as a unit because of their comparative segregation from others; an assemblage of objects in a certain order or relation, or having some semblance or common characteristic.' * * * A group of axles in the present case must mean something other than all, and we hold it means those things—axles—which are contiguous and segregated by reason of their use." See, also, State

ex rel. Beeson v. Marsh, 150 Neb. 233, 34 N. W. 2d 279.

The defendant contends that because the distance between the first and last axles of the vehicle operated by him was 31 feet he was clearly entitled under the law to impose a gross weight on the highway of 53,490 pounds, 10 pounds more than the total weight of his truck and the load on it. This gives no consideration to and disregards the language of the statute "when the distance between the extreme of any two or more consecutive axles or group of axles * * *." This is not permissible. In Ledwith v. Bankers Life Ins. Co., 156 Neb. 107, 54 N. W. 2d 409, it is said: "In the consideration and application of a statute effect should be given, if possible, to all its several parts and nothing should be avoided. The subject of the enactment and the language thereof in its plain, ordinary, and popular sense should be considered to determine the legislative will. * * * It is the duty of the court, so far as practicable, to give effect to the entire language of a statute and to reconcile the different provisions of it so that they are consistent, harmonious, and sensible." City of Seward v. Gruntorad, 158 Neb. 143, 62 N. W. 2d 537, in speaking upon this subject concluded: "Just as an interpretation which gives effect to the statute will be chosen instead of one which defeats it, so an interpretation which gives effect to the entire language will be selected as against one which does not."

The Legislature within the constitutional limitation has plenary control of the public highways of the state. They are public property. The power to regulate inheres not only in the right of the Legislature to provide, maintain, and control them and their use, but also in the police power of the state which is its province to exercise in appropriate circumstances. The limitation of the weight of a vehicle and the load thereon to be transported on a public highway is a proper subject for the exercise of the police power. If public interest is in-

volved preferment of that interest over the property interest of an individual is one of the characteristics of the exercise of police power. The Legislature by virtue of the police power of the state has equal authority to provide for the general protection of public property as it has to legislate for the protection of an individual. The right to use the public highways for purposes of travel is not an absolute and unqualified one. It may be restricted and controlled by the lawmaking authority when necessary to provide for the safety and general welfare of the public by reasonable and nondiscriminatory regulations. State ex rel. Caldwell v. Lincoln Street Ry. Co., 80 Neb. 333, 114 N. W. 422, 14 L. R. A. N. S. 336; Schroder v. City of Lincoln, 155 Neb. 599, 52 N. W. 2d 808; People v. Linde, 341 Ill. 269, 173 N. E. 361, 72 A. L. R. 997; People ex rel. Curren v. Schommer, 392 Ill. 17, 63 N. E. 2d 744, 167 A. L. R. 1347; State ex rel. York v. Board of County Commissioners, 28 Wash. 2d 891, 184 P. 2d 577, 172 A. L. R. 1001; Hertz Drivurself Stations, Inc. v. Siggins, 359 Pa. 25, 58 A. 2d 464, 7 A. L. R. 2d 438; Annotation, 72 A. L. R. 1004; 25 Am. Jur., Highways, §§ 253, 254, pp. 544, 545.

The part of the statute invalidated by the judgment of the trial court does not have any of the constitutional infirmities imputed to it. The complaint stated a violation of the portion of the statute found and adjudged to be ineffective by the district court.

EXCEPTIONS SUSTAINED.

JERRY BELZA, ON BEHALF OF HIMSELF AND ALL OTHERS SIMILARLY SITUATED, APPELLEE, V. THE VILLAGE OF EMERSON, A MUNICIPAL CORPORATION, NEBRASKA, ET AL., APPELLANTS, IMPLEADED WITH GERALD B. LONGWELL, COUNTY TREASURER OF DAKOTA COUNTY, NEBRASKA, APPELLEE.

68 N. W. 2d 272

Filed January 28, 1955. No. 33519.

1. **Municipal Corporations: Taxation.** Where a city or village has made public improvements and levied special assessments therefor and property owners have opportunity to present their objections to the municipal body and to there have a hearing and pursue proceedings for review of the final decision of that body, whether by error or appeal, they cannot fail to do so and then collaterally maintain an independent suit to restrain collection of the special assessments in the absence of fraud or a substantial jurisdictional defect in the proceedings.
2. **Case Overruled.** The opinion and decision in Belza v. Village of Emerson, 158 Neb. 641, 64 N. W. 2d 214, are vacated and set aside.

APPEAL from the district court for Dakota County: SIDNEY T. FRUM, JUDGE. *Reversed and remanded with directions.*

Harold T. Curtiss, for appellants.

Mark J. Ryan, for appellee.

Paul H. Bek and *Ivan A. Blevens,* amicus curiae.

Heard before SIMMONS, C. J., CARTER, MESSMORE, YEAGER, CHAPPELL, WENKE, and BOSLAUGH, JJ.

CHAPPELL, J.

Plaintiff Jerry Belza, on his own behalf and all others similarly situated, brought this collateral equity action against defendants village of Emerson, the individual members of its board of trustees, and Gerald B. Longwell, county treasurer of Dakota County. Such action sought to have certain sewer assessments made and levied by the village against plaintiff's real estate located

therein declared to be null and void and not a lien thereon, and to obtain an injunction preventing collection thereof. After a trial the court rendered judgment in favor of plaintiff in his own behalf without granting any relief to others similarly situated. Motion for new trial was overruled, whereupon the village of Emerson and its trustees appealed, assigning substantially that the judgment was not sustained by the the evidence and was contrary to law.

In a former opinion, Belza v. Village of Emerson, 158 Neb. 641, 64 N. W. 2d 214, we affirmed the judgment primarily upon the ground that the assessments never became a valid lien because they were never certified or placed upon the property tax lists in the manner or within the time provided by law. The decision was of great public interest and concern to many cities of the second class and villages in this state because it directly affected the collection of special assessments levied and assessed by them. Therefore, upon application by the city of Seward, we permitted it to file a brief amicus curiae in support of a request for reconsideration of our opinion and decision. In the light thereof we granted reargument, and upon further consideration of the facts and applicable law we conclude that our former opinion was erroneous in some material respects. Therefore such opinion and decision are hereby vacated and set aside.

In that connection, plaintiff's petition substantially alleged as follows: That on September 9, 1948, he became the owner of the property involved, described lots located in that part of the village of Emerson within Dakota County; that the village claimed a lien against plaintiff's property by reason of certain special sewer assessments purportedly levied on January 18, 1923; and claimed that it had a right to collect same, together with interest and penalties. Plaintiff alleged that such assessments were null, void, and unenforceable because: (1) That said main sanitary sewer district No. 1 was not

organized according to law; (2) that no proper resolution was passed and adopted by the chairman and board of trustees; (3) that no resolution stating the kinds of material to be used, the method of construction, the extent of the work, the amount of the engineer's estimate of the total cost thereof, the kind and size of the sewer, the designation of its location and terminal points, and the outside boundaries of the district in which it proposed to assess the cost on the property benefited to pay the same, was ever legally passed and adopted; (4) that notice of the time set for the consideration of said resolution was not given as required by law; (5) that no proper notice to contractors was given as required by law; (6) that no certificate of any qualified engineer accepting said work and improvement was ever filed with the clerk of defendant village; and (7) that no hearing was had on the proposed assessments of benefits by said village board sitting as a board of assessment and equalization after notice as required by statute, and that no proper notice of such meeting was ever given as required by law.

In that regard, as held in Majerus v. School District, 139 Neb. 823, 299 N. W. 178: "The law presumes official acts of public officers, in a collateral attack thereon, to have been done rightly, and with authority, in the absence of evidence to the contrary, and, in such a collateral attack, acts done, which presuppose the existence of other acts to make them legally effective, are presumptive proof of the existence of such other acts." See, also, Campbell Co. v. City of Harvard, 123 Neb. 539, 243 N. W. 653. Further, an examination of the record herein discloses competent evidence from which we conclude that none of plaintiff's foregoing seven contentions has any merit. Some of the pertinent minutes and other records with relation to the village sewer district proceedings could not be found in the village archives or elsewhere after diligent search, but some were so found, and after proper foundation laid, second-

ary evidence with relation to the existence and validity of those not so found was adduced, as approved and authorized by Village of Deshler v. Southern Nebraska Power Co., 133 Neb. 778, 277 N. W. 77; Clough v. North Central Gas Co., 150 Neb. 418, 34 N. W. 2d 862; City of Scottsbluff v. Kennedy, 141 Neb. 728, 4 N. W. 2d 878; section 84-315, R. R. S. 1943; and section 25-1279, R. R. S. 1943.

Such evidence included a certified transcript and history of the entire village sewer district proceedings furnished as required by section 299, C. S. 1922, now section 10-117, R. R. S. 1943, in connection with an application for the authorization to issue bonds for construction of the sewer system on file in the office of the Auditor of Public Accounts, who certified that he had examined the proposed bond and certified transcript of all proceedings previous to the issuance thereof, found that said bonds had been regularly and legally issued for a lawful purpose and registered in his office as required by law, and that he certified the same with approval to the county clerks of Thurston, Dixon, and Dakota counties, who in turn respectively certified the same as registered in their offices. The record does disclose that the cost of the sewer disposal plant may have been included in the levy of special assessments, contrary to our holding upon direct attack in Hurd v. Sanitary Sewer District, 109 Neb. 384, 191 N. W. 438, which simply authorized new levies to be made. However, as we view it, plaintiff's petition in the case at bar never raised that question. He simply alleged that the assessments were wholly void and unenforceable for other specifically recited reasons. From this record we are required to conclude that the sewer district was regularly organized and constructed, that special assessments therefor were regularly levied and assessed, and bonds were regularly issued to pay for construction, which was completed and accepted, all entirely in con-

formity with sections 4337 to 4351, and section 299, C. S. 1922, then controlling.

On the other hand, plaintiff alleged: "That no special assessments against the property owned by this plaintiff * * * within said alleged Sanitary Sewer District No. 1, were ever certified to the County Clerk of Dakota County, Nebraska, for the purpose of being placed upon the property tax lists for collection as provided by Section 4369 of the Compiled Statutes of Nebraska for 1922" and "That no special assessments for the construction of a sewer in Main Sanitary Sewer District No. 1 of the Village of Emerson, Nebraska, were ever placed upon the property tax lists of Dakota County, Nebraska, by the County Clerk of said county."

The evidence with relation to such contentions is without dispute. It substantially discloses that on or about March 10, 1923, C. V. Dunn, who was deceased some 2 years before this litigation arose, prepared an instrument signed and certified by him as village clerk of the village of Emerson, Nebraska, and bearing the official seal of such village. At the top thereof appear the words: "CLERK'S CERTIFICATE OF UNPAID ASSESSMENTS TO THE COUNTY TREASURER." The body of the instrument read:

"State of Nebraska)
) ss.
County of Dakota)

"TO THE COUNTY TREASURER OF DAKOTA COUNTY, NEBRASKA.

"I, C. V. Dunn, Village Clerk of the Village of Emerson, Dakota County, Nebraska, hereby certify that at a meeting of the Board of Trustees of the Village of Emerson, Nebraska, held on the 18th., day of January 1923, the said Board of Trustees *did levy a special assessment,* for and on account of the construction of Main and Saniatary (sic) Sewer System and Disposal Plant in Main Sanitary Sewer District Number One (1) of said Village and against the real estate located within

said district, including the real estate and personal property of the Chicago, St. Paul, Minneapolis and Omaha Railway Company, *all as shown on the schedule hereto attached,* said Main Sanitary Sewer District Number One (1) being wholly within the limits and boundaries of the Village of Emerson, Nebraska. (Italics supplied.)

"The total amount of unpaid assessments shown on said schedule is Five thousand nine hundred and forty ($5940.00) Dollars.

"I further certify that the said assessments are payable at the time and in the installments shown below, and delinquent after said dates:

"One-fifth on the 10th., day of March 1923,
"One-fifth on the 10th., day of March 1924,
"One-fifth on the 10th., day of March 1925,
"One-fifth on the 10th., day of March 1926,
"One-fifth on the 10th., day of March 1927.

"All installments to bear interest at the rate of 6% per annum and all delinquent installments bear interest at the rate of 12% per annum.

"The bonds issued in anticipation of this assessment are non-optional, hence interest should be collected on payments made in advance of dates due.

"In witness whereof I have hereunto set my hand and affixed the seal of the Village of Emerson, Nebraska, this 10th., day of March 1923."

Such certificate and attached schedule of assessments, entitled "Special Assessment Tax List Sanitary Sewer in Village of Emerson, Dakota County, Nebraska, Date Issued January 18, 1923, Certified to County for Collection March 10, 1923, Rate 6 Per Cent" described each property and set forth the amounts assessed against same. They reached the county treasurer's office and were there found by the present county treasurer when he assumed office in 1947. They were in a separate bound book volume, as permitted by section 5957, C. S.

1922, now section 77-1304, R. R. S. 1943. They bore no filing mark or stamp of any kind of either his office or that of the county clerk, but we have been unable to find any statute which required that to be done. The present county treasurer had no knowledge of how such record got there or when, but it clearly discloses that credits for payment of such assessments were respectively entered thereon over a period from at least December 11, 1923, and until July 5, 1952, so it may be inferred that such bound volume was in the country treasurer's office during all that period.

The sewer assessments recited therein did not appear upon any other tax lists in his office then or during his term of office, and no tax sale certificates were ever issued therefor as far as he knows or his record discloses. During the last 2 years the tax lists have been prepared by the county assessor, but prior thereto they were prepared by the county clerk. Up until such time the normal procedure in the county treasurer's office was to receive the tax books or schedules, similar in material respects with that appearing herein, from the county clerk by simple informal delivery by such clerk to his office. Thereby, the county treasurer enforced collection of the assessments by virtue of mere possession of such certificate and schedule. Therefrom he found the designation of the property and the amount of the assessments on each lot, and when paid the notation of it was made thereon. In such situation, if the certificate and attached schedule aforesaid had been addressed to the county clerk and delivered to him by the village clerk, as it may well have been for aught the record shows, instead of being addressed to the county treasurer, the certificate required by statute would have been regular and complete. The fact is, the attached schedule or tax list was substantially complete and lacked only the certificate or warrant of the county clerk, which was a mere irregularity (§ 77-1854, R. R. S. 1943), or

informality, which could be supplied upon discovery of the deficiency (§ 77-1616, R. S. Supp., 1953). See, also, § 77-1853, R. R. S. 1943.

In connection with the foregoing, an abstracter of 50 years experience in Dakota County, who had extended or prepared some 10,000 abstracts, first saw and examined the certificate with schedule attached, several years ago, about the time when it was placed in the county treasurer's office, and in preparation or extension of several abstracts of property described therein, he had certified as liens against the property involved any unpaid sewer assessment liens appearing therein at all times except upon one occasion, and then his attention was called to that omission, whereupon he reexamined the certificate. Whether or not such occasion was the one involving plaintiff's property is not directly shown, but may be reasonably so inferred from the fact that plaintiff received a warranty deed for the property involved on September 9, 1948, and thereafter the regular taxes were paid until 1952 when the county treasurer first called plaintiff's attention to the special sewer assessments and requested payment thereof, which was refused.

As heretofore noted, plaintiff relied upon section 4369, C. S. 1922, now section 17-702, R. R. S. 1943. He made no contention that section 5981, C. S. 1922, now section 77-1612, R. R. S. 1943, relied upon in our former opinion, was either factually or legally controlling in this case. It now appears that such section, when considered with others in pari materia therewith, relates to the several *amounts* of taxes required by law to be certified by the county clerk and *levied by the county board of equalization.* The special assessments here involved were required to be *levied by the mayor and council or the board of village trustees.* § 4345, C. S. 1922, now § 17-921, R. R. S. 1943. As the case comes to this court, we conclude that section 77-1612, R. R. S. 1943, has no con-

trolling relation factually or legally to the special assessments involved.

On the other hand, section 17-702, R. R. S. 1943, simply required the council or board of trustees at the time required by law to cause to be certified to the county clerk *the percentage or number of mills on the dollar of tax levied* for all city or village purposes by them on the taxable property within the corporation *"for the year then ensuing, as shown by the assessment roll for such year"* including all special assessments and taxes assessed as hereinbefore provided. It then limits the number of mills on the dollar which may be so certified, assessed, and collected. We find nothing in that section which requires that special assessments as such shall be certified to the county clerk and as such placed on the property tax lists in order to become a valid lien. Such section, as the case comes to this court, is not either factually or legally controlling herein.

With regard to sewer assessments, section 4345, C. S. 1922, now section 17-921, R. R. S. 1943, provides: "After the equalization of such special assessments as herein required, the same shall be levied by the mayor and council or the board of village trustees, upon all lots or parcels of ground within the district specified which are benefited by reason of said improvement. The same may be relevied if, for any reason, the levy thereof is void or not enforceable and in an amount not exceeding the previous levy. *Such levy shall be enforced as other special assessments,* and any payments thereof under previous levies shall be credited to the person or property making the same. All assessments made for such purposes *shall be collected in the same manner as general taxes* and shall be subject to the same penalties." (Italics supplied.)

In that regard, section 17-514, R. R. S. 1943, formerly a part of section 4283, C. S. 1922, provides: "All assessments *shall be a lien on the property on which levied from the date of levy,* and shall thereupon be certified

by direction of the council or board of trustees to the treasurer of such city or village for collection; and such assessment shall be due and payable to such treasurer until the first day of November thereafter, or until the delivery of the tax list for such year to the treasurer of the county in which such city or village may be situated, at and *after which time the same shall be due and payable to such county treasurer.* The council or board of trustees of such city or village shall, within the time provided by law, cause such assessments, or portion thereof then remaining unpaid, to be certified to the county clerk of said county for entry upon the proper tax lists; and in case the city or village treasurer shall collect any assessment or portion thereof so certified while the same shall be payable to such treasurer as aforesaid, the same shall be by the treasurer certified to the county treasurer at once, and the latter shall correct his record to show such payment." (Italics supplied.) As we view it, such section is the key to a solution of the present case, since, as provided by section 17-921, R. R. S. 1943, the levy for sewer assessments must be enforced as all other special assessments and collected in the same manner as general taxes, and subject to the same penalties. See, also, § 77-1858, R. R. S. 1943.

In Polenz v. City of Ravenna, 145 Neb. 845, 18 N. W. 2d 510, the city levied special assessments on the property involved for designated total amounts, one-twentieth of which became due annually, and if not paid when due, became delinquent. The city did not certify the total of unpaid assessments to the county clerk as required by section 17-514, R. R. S. 1943, but rather only as annual installments became delinquent they were certified to the county clerk and thereafter appeared upon the tax records in the office of the county treasurer. At the date of commencement of a tax certificate foreclosure and at the time of the decree therein, the last three special assessments were not delinquent and had not been certified to the county authorities, but they

were thereafter so certified. In speaking of the levied special assessments, we said: "The amounts became a lien against said premises from the date of the levy in accordance with the provisions of section 4283, Comp. St. 1922, now section 17-514, R. S. 1943. * * * The question here is: Are these three installments liens upon the property after title has passed to the purchaser at the foreclosure sale?" We concluded that they were not because a valid title conveyed under the tax sale was not derivative but a new title in the nature of an independent grant by sovereign authority, and the purchaser took same free from any encumbrances, claims, or equities connected with the prior title. See, also, Dent v. City of North Platte, 148 Neb. 718, 28 N. W. 2d 562; Coffin v. Old Line Life Insurance Co., 138 Neb. 857, 295 N. W. 884. By analogy herein, the amounts involved became a lien against plaintiff's premises from the date of the levy, and he has a derivative title.

In construing the sewer assessment statutes here involved, we concluded in Weilage v. City of Crete, 110 Neb. 544, 194 N. W. 437, that generally where a city or village has made public improvements and levied special assessments therefor, and property owners have opportunity to present their objections to the municipal body and to there have a hearing and pursue proceedings for review of the final decision of that body, whether by error or appeal, they cannot fail to do so and then collaterally maintain an independent suit to restrain collection of the special assessments in the absence of fraud or a substantial jurisdictional defect in the proceedings. See, also, Bamrick v. Village of Minatare, 118 Neb. 644, 225 N. W. 755; Wead v. City of Omaha, 124 Neb. 474, 247 N. W. 24. Cases cited in our former opinion involved such defects.

In that regard, as aptly stated in People's Water Co. v. Boromeo, 31 Cal. App. 270, 160 P. 574, a case often cited: "The argument of the appellants that every step in the process of making up the assessment-roll is

strictissimi juris, and must be complied with to the letter before a valid obligation to pay taxes is imposed upon the property owner, while no doubt true in its application to the proceeding leading up to a valid levy and assessment of the tax, has not been held to apply with the same degree of strictness to the mere ministerial acts of the clerk of the board of supervisors and of the auditor in making the affidavits and carrying out the computations after the taxes have been duly levied and assessed. (Steele v. San Luis Obispo County, 152 Cal. 785, [93 Pac. 1020].)" Our statutes cited herein require the same conclusion in the case at bar.

We conclude that, in the light of the foregoing evidence and authorities, the sewer. assessments here involved were regularly levied and assessed, thus were at all times a lien upon the property from the date of the levy, and there was simply an irregularity in the manner of certification and attempted collection thereof. We have found no statute of limitations barring the collection of special assessments and no authorities have been cited or found which could make them void by reason of laches or estoppel by the city or county. Rather, in Omaha National Bank v. Jensen, 157 Neb. 22, 58 N. W. 2d 582, after concluding that: "Statutory provisions for the levy of a tax are imperative," we held: "Public policy, to prevent loss to the state through the negligence of public officers, forbids the application of the doctrine of estoppel to the state, growing out of the conduct and representation of its officers.

"Taxation and the collection of taxes are strictly governmental activities as distinguished from private and proprietary activities, and the public as to such activities cannot be estopped."

Further, in Flansburg v. Shumway, 117 Neb. 125, 219 N. W. 956, this court held: "The lien of taxes regularly levied on real estate is, ordinarily, perpetual and can be divested only by payment or in some manner authorized by statute."

For reasons heretofore stated, we conclude that plaintiff could not maintain his cause of action. Therefore, the judgment of the trial court should be and hereby is reversed and the cause is remanded with directions to dismiss the same. All costs are taxed to plaintiff.

REVERSED AND REMANDED WITH DIRECTIONS.

YEAGER, J., not participating.

KERMIT C. NELSEN, PLAINTIFF IN ERROR, V. STATE OF NEBRASKA, DEFENDANT IN ERROR.

68 N. W. 2d 194

Filed January 28, 1955. No. 33654.

1. **Trial.** It is not prejudicial error for the trial court to fail or refuse to give an instruction to a jury based on the maxim, "He who speaks falsely on one point will speak falsely upon all."
2. ———. To render the failure to give an instruction prejudicially erroneous, it is not sufficient that correct abstract propositions of law are therein embodied, but in addition it is requisite that such propositions be applicable to facts, at least in some degree, inferable from the evidence.
3. **Criminal Law.** Where the punishment of an offense created by statute is left to the discretion of a court, to be exercised within certain prescribed limits, a sentence imposed within such limits will not be disturbed unless there appears to be an abuse of such discretion.

ERROR to the district court for Thayer County: STANLEY BARTOS, JUDGE. *Affirmed.*

Robert B. Waring, for plaintiff in error.

Clarence S. Beck, Attorney General, and *Richard H. Williams,* for defendant in error.

Heard before SIMMONS, C. J., CARTER, MESSMORE, YEAGER, CHAPPELL, WENKE, and BOSLAUGH, JJ.

SIMMONS, C. J.

This matter comes here on petition in error. Petitioner, hereinafter called the defendant, was charged

under section 28-411, R. R. S. 1943, with assault and battery. He was found guilty in county court, fined $100, and sentenced to jail for 60 days. Defendant appealed. A jury in district court found him guilty. He was sentenced to serve 20 days in jail.

We affirm the judgment of the trial court.

Defendant argues three assignments of error here.

The defendant had a contract to tear down a two-story building on the west side of a street in Hebron that had been damaged by a cyclone. To do that he was using a tractor with cable attached to haul material from the building to the street. It was expedient when doing so to have the tractor pull diagonally in a northeast direction across the street and, when so used, north and southbound traffic was blocked by the tractor and cable. When the tractor and cable were not so extended, southbound traffic was blocked by a barricade built half way across the road. This, as we read the record, permitted southbound traffic only on the east half of the street. To prevent traffic moving through there, defendant had a guard stationed who directed southbound traffic through an alley. The alley passage was closed to southbound traffic when the tractor and cable were in an extended position.

To prevent northbound traffic from coming through, defendant had placed a truck in the street at right angles to the curb and across the traffic lane. There is a dispute in the evidence as to when it was put there, but it was there when the events now recited followed.

The complaining witness, hereinafter called Adcock, was one of four persons in an automobile who were going south at this point. They drove into the line of travel of the tractor and then found the path blocked by the truck. Adcock got out of the car, went to and got into the truck, and released the clutch and permitted it to move forward a short distance (the maximum fixed in the record is 6 feet) sufficient to permit passage of a car. Defendant's testimony is that, from the

building, he ordered the car out of the way of the tractor, and ordered Adcock to leave the truck alone.

Defendant then came into the street. Adcock had at that time left the truck and was returning to his car. Defendant came up to Adcock, turned him around, and struck him in the face. The blow was sufficient to cause bruises, bleeding, and a broken tooth. Adcock fell to the ground. Only the one blow was struck. Defendant at first testified that he pulled Adcock out of the truck and "hit him." Later, on cross-examination, defendant stated that he did not know where Adcock was when he was hit. Two of the State's witnesses and two of defendant's witnesses stated that Adcock was on his way back to the car when he was hit. At the argument on the motion for a new trial, it was conceded that Adcock was entirely out of the truck when the assault occurred.

Defendant requested an instruction on the maxim "Falsus in uno, falsus in omnibus." The court refused to give it. Defendant argues error. Without discussing the evidence upon which defendant relies, we deem it sufficient to call attention to our holding in Knihal v. State, 150 Neb. 771, 36 N. W. 2d 109, 9 A. L. R. 2d 891, wherein we held: "It is not prejudicial error for the trial court to fail or refuse to give an instruction to a jury based on the maxim, 'He who speaks falsely on one point will speak falsely upon all.'" Our reasons for the rule are there stated and need not be repeated. We adhere to that holding.

The defendant next argues an assignment of error that the trial court refused to give the jury an instruction to the effect that a person may with reasonable force defend his property as well as his person when invaded. The difficulty with defendant's position is that his person was not "invaded" and whatever invasion of his property occurred was a completed act when the assault occurred. Defendant's anger, followed by the assault, may have been provoked by what Adcock

did, but obviously it was not an act in defense of his property. That invasion had ended before the assault. The necessity, if any, for the use of force had passed.

The rule is: "To render the failure to give an instruction prejudicially erroneous, it is not sufficient that correct abstract propositions of law are therein embodied, but in addition it is requisite that such propositions be applicable to facts, at least in some degree, inferable from the evidence." Wells v. State, 47 Neb. 74, 66 N. W. 29. See, also, Kirkendall v. State, 152 Neb. 691, 42 N. W. 2d 374.

Finally, defendant argues that the sentence to jail is excessive and asks that our statutory authority be exercised in reducing the sentence to a fine.

The long-followed rule is: "Where the punishment of an offense created by statute is left to the discretion of a court, to be exercised within certain prescribed limits, a sentence imposed within such limits will not be disturbed unless there appears to be an abuse of such discretion." Young v. State, 155 Neb. 261, 51 N. W. 2d 326.

We find no abuse of discretion here.

The judgment of the trial court is affirmed.

AFFIRMED.

PEARL L. KIDDER, APPELLEE, V. MILTON C. KIDDER, APPELLANT.
68 N. W. 2d 279

Filed February 4, 1955. No. 33599.

1. Divorce. The question of whether or not there has been corroboration in an action for divorce within the meaning of section 42-335, R. R. S. 1943, is one for determination upon the facts and circumstances of each particular case.
2. ———. In a case where there has been condonation of cruelty constituting grounds for divorce, repetition revives the cruelty condoned.
3. ———. The burden of proof of condonation of cruelty as a

defense in an action for divorce is on the party claiming it.

4. ———. In determining the question of alimony or division of property as between the parties the court will consider the respective ages of the parties to the marriage; their earning ability; the duration of the marriage; the conduct of each party during the marriage; their station in life, including the social standing, comforts, and luxuries of life which the wife would probably have enjoyed; the circumstances and necessities of each; their health and physical condition; and their financial circumstances as shown by the property they owned at the time of divorce, its value at that time, its income-producing capacity, if any, whether accumulated or acquired before or after the marriage, the manner in which it was acquired, and the contributions each has made thereto. From these elements and all other relevant facts and circumstances, the court will determine the rights of the parties and make an award that is equitable and just.

APPEAL from the district court for Cherry County: DAYTON R. MOUNTS, JUDGE. *Affirmed.*

J. C. Coupland and *Julius D. Cronin,* for appellant.

William B. Quigley, William M. Ely, and *Samuel C. Ely,* for appellee.

Heard before SIMMONS, C. J., CARTER, MESSMORE, YEAGER, CHAPPELL, WENKE, and BOSLAUGH, JJ.

YEAGER, J.

This is an action for divorce by Pearl L. Kidder, plaintiff and appellee, against Milton C. Kidder, defendant and appellant. Trial was had to the court following which decree was rendered granting to plaintiff an absolute divorce; the custody of two minor children of the parties; $50 a month for the support of the children until the younger should attain the age of 18 years; permanent alimony in the amount of $30,000 payable in annual installments of $2,500 beginning March 1, 1954, with interest on delinquent installments; residence property in Mullen, Nebraska; certain described household goods; and an attorney's fee for her attorney in the amount of $750.

Following the rendition of decree the defendant filed a motion and a supplemental motion for new trial which motions were in due course overruled. From the decree and the order overruling these motions the defendant has appealed.

The assignments of error asserted as grounds for reversal are substantially (1) that the court erred in refusing to grant a new trial on the basis of newly discovered evidence; (2) that the findings and decree are contrary to the evidence; (3) that the findings and decree are contrary to law; and (4) that the alimony awarded is excessive.

Briefly stated the grounds for divorce are that the defendant has been guilty of cruelty practiced upon the plaintiff and children of the parties almost from the beginning of the marriage, which was in September 1918, down to and including February 13, 1953, and particularly on February 13, 1953.

The defendant generally denied all of the cruelty charged against him. He specially asserted in substance as a defense that cruelty of which he had been guilty, if any, prior to September 1951, had been condoned and not revived.

On this appeal he reasserts his defense and contends, as he did in the district court, that the testimony of plaintiff as to the act or acts charged against him as of February 13, 1953, have not been corroborated in consequence whereof a decree based thereon may not be upheld.

The plaintiff has in her testimony related a lengthy and sordid history of trouble and cruelty practiced upon her and upon the children of the parties by the defendant starting as she has pleaded in 1918 and ending with final separation in February 1953. The repetition of that history could serve no useful purpose. It ought to be said however that at least as to that phase of her pleaded cause of action relating to cruelty to children

as grounds for divorce there is evidence of probative value which evidence was corroborated.

From an examination of the record it becomes clear that in 1951 these parties were having difficulties in consequence of which on September 28, 1951, plaintiff instituted an action for divorce against the defendant in which she charged him with cruelty. Thereafter the parties became reconciled. The reconciliation was effected on the promise of defendant that he would not again be guilty of cruelties upon and toward the plaintiff. It is conceded that this reconciliation was so conditioned. That action was dismissed October 29, 1951.

There is no evidence of specific acts of cruelty practiced directly upon plaintiff thereafter until February 13, 1953. Plaintiff testified that on this date the defendant struck her with such force and violence that a large lump was caused to be raised on the side of her face which became discolored.

There were no witnesses to the incident but the evidence discloses that at least three witnesses saw the lump on the day plaintiff said that the blow was inflicted. They testified that plaintiff said that the lump resulted from striking by the defendant.

The defendant did not dispute the condition as described but his version was that plaintiff threatened to strike him with a hammer, whereupon he fell against her and she fell out of a jeep and in some manner received the injury.

If the testimony as to this incident was corroborated it was by the testimony of witnesses as to what they saw and what plaintiff told them on February 13, 1953. The defendant contends that this evidence is not corroborative of the evidence of plaintiff and that there is no other evidence having a corroborative character or quality and that therefore the requirements of statute as to corroboration have not been satisfied. See § 42-335, R. R. S. 1943.

On the question of corroboration this court has said:

"It is impossible to lay down a general rule as to the degree or amount of corroboration required in a divorce action, as each case must necessarily be decided upon its own facts and circumstances." Brown v. Brown, 146 Neb. 908, 22 N. W. 2d 148. See, also, Johnsen v. Johnsen, 144 Neb. 208, 12 N. W. 2d 837; Green v. Green, 148 Neb. 19, 26 N. W. 2d 299; Hodges v. Hodges, 154 Neb. 178, 47 N. W. 2d 361; Wakefield v. Wakefield, 157 Neb. 611, 61 N. W. 2d 208.

The case of Green v. Green, *supra,* appears to factually support the conclusion that the evidence of plaintiff in the case here has received sufficient corroboration to satisfy the statute and the decisions of this court interpreting and applying it. In the opinion there this court made the following observation and concluded that the evidence was sufficiently corroborated: "The condition of the child after the whipping, showing marks on her body, was testified to by the plaintiff's mother."

In the case at bar the condition of plaintiff after the striking showing the lump and its condition was testified to by competent witnesses.

Unless this court is prepared to depart from its general holdings and the particular holding in Green v. Green, *supra,* it must be said that the testimony as to the incident of February 13, 1953, has been corroborated agreeable to the statute.

The effect of this is to say that if the evidence of plaintiff as to the incident of February 13, 1953, as a whole, was sufficient to sustain a decree of divorce then no consideration of the question of condonation in September or October 1951 is required. In the light of the conditional reconciliation of 1951 and this evidence as to February 13, 1953, all acts of cruelty before September 1951, which were proved, became proper to be considered in the determining whether or not plaintiff was entitled to a decree of divorce. The appropriate rule is as follows: "Condonation is forgiveness for the past upon condition that the wrongs shall not be re-

peated. It is dependent upon future good conduct, and a repetition of the offense revives the wrong condoned; * * *." Anderson v. Anderson, 89 Neb. 570, 131 N. W. 907, Ann. Cas. 1912C 1. See, also, Wetenkamp v. Wetenkamp, 140 Neb. 392, 299 N. W. 491; Eicher v. Eicher, 148 Neb. 173, 26 N. W. 2d 808; Wakefield v. Wakefield, *supra.*

Another contention of defendant is that the plaintiff condoned the act of February 13, 1953. He contends that this is true because she remained in the family home for 3 days thereafter as his wife and that this amounted to condonation.

The burden of proof of condonation of cruelty as a defense in a divorce action is upon the party claiming it. McConnell v. McConnell, 37 Neb. 57, 55 N. W. 292; Trevett v. Trevett, 151 Neb. 517, 38 N. W. 2d 332.

We do not think the defendant has in this connection shown to the degree required by law that there was condonation by the plaintiff. We are unwilling to adopt the view that a wife forfeits her right to successfully maintain an action for divorce on the ground of cruelty by the act alone of remaining in the household of herself and husband for a period of 3 days.

In the light of these observations it is concluded that the decree is neither contrary to the evidence nor to the law. It is the further conclusion that the plaintiff was and is entitled to an absolute divorce from the defendant, unless the court erred in its refusal to grant a new trial on the ground of newly discovered evidence. We do not think it erred in this respect for the reasons which follow.

The incident to which the claimed newly discovered evidence referred was not pleaded or relied upon at the trial as a ground for divorce. It occurred on February 16, 1953. On that day the parties and two of their children went to Mullen in a jeep driven by the defendant. As he was driving into Mullen the plaintiff informed defendant that she was not going to return home, that

is, that she was separating from him. He had no previous knowlege of her intention. On receipt of this information the defendant suddenly turned off on a side street or road, whereupon plaintiff and the two children jumped out of the jeep. The defendant drove up a short distance, turned around, and started back. Witnesses for plaintiff gave testimony the effect of which was to convey an impression that the defendant made an effort to run the plaintiff down with the jeep. The defendant denied any such intention or purpose. The purported newly discovered evidence was proffered testimony of witnesses which would counteract the testimony of plaintiff's witnesses as to this incident.

As we view it any such evidence had no value in proof or disproof of any issue in the case. If the testimony of plaintiff's witnesses be accepted as true, it proved nothing more than infuriation of defendant at the plaintiff after her purpose and the factual basis for her action for divorce were complete. The court did not err in refusing to grant a new trial.

The remaining question is that of alimony. The rule generally applicable in this respect is the following: "In determining the question of alimony or division of property as between the parties the court will consider the respective ages of the parties to the marriage; their earning ability; the duration of the marriage; the conduct of each party during the marriage; their station in life, including the social standing, comforts, and luxuries of life which the wife would probably have enjoyed; the circumstances and necessities of each; their health and physical condition; and their financial circumstances as shown by the property they owned at the time of divorce, its value at that time, its income-producing capacity, if any, whether accumulated or acquired before or after the marriage, the manner in which it was acquired, and the contributions each has made thereto. From these elements and all other relevant facts and circumstances, the court will determine

the rights of the parties and make an award that is equitable and just." Chambers v. Chambers, 155 Neb. 160, 51 N. W. 2d 310.

It is reasonable to say that these parties made an approximately equal contribution in property and effort from the beginning to end of this marriage. They both worked hard and they lived frugally. There is no substantial contention by either that this was not true. They accumulated a substantial amount of land and other property. At the time of trial there had been an accumulation of 1,922.4 acres of deeded land and leases on 737 acres of school land. There were more than 179 head of cattle but how many more is not known. The only evidence in this respect came from the defendant and he testified that he went into the winter of 1952-1953 with 179 head but at the time of trial he said there were in addition some calves. His testimony was descriptive of 67 or 68. Of these there were 26 coming yearlings weighing about 400 pounds each, 45 or 46 heavy cows or cows with calves, and 5 bulls. The remainder appear to have been cows or cows with calves and 2-year-old heifers. The only description of these or the ones mentioned above as to quality is that some were not of high quality but that most of them were of Hereford stock. He gave no testimony as to the value of any of them. Other witnesses testified as to values of the cattle by classes but there is no evidence as to the number in any class except as to 5 bulls and 26 coming yearlings. The evidence reasonably supports a value of one of the bulls of $300 and the remaining four of $800 or a total of $1,100. The evidence supports a value of the coming yearlings of $1,690.

As to those not numbered the evidence of plaintiff is that cows with calves were worth from $150 to $155 each, cows without calves $140 each, and 2-year-old heifers $90 each. The testimony on behalf of defendant was that cows of the better classification with calves were worth $140 to $145 each, cows of the inferior class

without calves were worth $100 to $110 each, and 2-year-old heifers were worth $90 each. On this evidence the plaintiff estimates the value of the cattle without calves to be $23,280. In his brief defendant appears to concede a valuation of from $19,000 to $21,000.

The evidence of plaintiff as to the value of the land was $19 to $20 an acre for the deeded land. At $19 an acre the total value would be $36,525.60. Included in this value was the value of the school land leases to which no specific value was attached. The value fixed by evidence of the defendant was $12.50 an acre for the deeded land and $5 an acre for the school land leases. This amounts to a total valuation of $27,715.

The evidence discloses that the house in Mullen was purchased for $500 and improvements costing about $1,800 were added. The value thereof appears to be about $2,300.

There appears to have been other personal property, life insurance, and money totaling in value about $8,881.

It should be mentioned also that there was a mortgage indebtedness of $2,500.

Thus the total net value of the entire property accumulated by the parties supported by the evidence of plaintiff is approximately $68,486.60, and as supported by the evidence of defendant is approximately $57,396.

As it appears to us the trial court made an attempt to make a substantially equal and even division of the property between the parties. In the light of the disparity in the valuations of real estate and of cattle and the reasonable conclusions which it is apparent may be drawn therefrom and which obviously were drawn we accept the determination of the court in fixing permanent alimony as fair and proper.

The decree of the district court should be and it is affirmed.

A fee in the amount of $500 is allowed to plaintiff for the services of her attorneys in this court.

AFFIRMED.

CATHERINE RICKER, A MINOR, BY AND THROUGH FLOYD RICKER, HER FATHER AND NEXT FRIEND, APPELLANT, V. GEORGE W. DANNER ET AL., APPELLEES.

68 N. W. 2d 338

Filed February 4, 1955. No. 33602.

1. **Automobiles: Negligence.** The stalling of a motor vehicle on a public highway caused by the failure of its mechanism is not negligence, but a failure to use ordinary care and diligence in removing it from the highway within a reasonable time after it is possible to do so is negligence.
2. **Negligence.** Proximate cause, as used in the law of negligence, is that cause which in a natural and continuous sequence, unbroken by an efficient intervening cause, produces the injury, and without which the injury would not have occurred.
3. ———. An efficient intervening cause is a new and independent force which breaks the causal connection between the original wrong and the injury. The cause of an injury is that which actually produces it, while the occasion is that which provides an opportunity for the causal agencies to act.
4. ———. An alleged cause of accident may sometimes be merely a condition and not the real cause. The activities of inanimate things are usually mere conditions and not causes.
5. **Automobiles: Negligence.** If the negligence of the driver of an automobile in which plaintiff was riding as a passenger was the sole proximate cause of the collision in which plaintiff was injured he may not recover from a third person for such injury.
6. **Negligence.** Negligence to justify a recovery of damages must have proximately caused or contributed to the injury for which compensation is sought.
7. **Automobiles: Negligence.** It is a general principle, subject to exceptions not applicable to this case, that it is negligence for a motorist to drive a motor vehicle on a public highway, at any time, at a speed or in such a manner that it cannot be stopped or its course changed in time to avoid a collision with an obstruction discernible within his range of vision ahead.

APPEAL from the district court for Sarpy County: JOHN M. DIERKS, JUDGE. *Affirmed.*

Mathews, Kelley, Fitzgerald & Delehant and *Martin A. Cannon, Jr.*, for appellant.

Kennedy, Holland, DeLacy & Svoboda, William P. Mueller, Mecham, Stoehr, Mecham & Hills, Gross, Welch,

Vinardi & Kaufman, and *Robinson, Hruska, Garvey & Nye,* for appellees.

Heard before SIMMONS, C. J., CARTER, MESSMORE, YEAGER, CHAPPELL, WENKE, and BOSLAUGH, JJ.

BOSLAUGH, J.

Appellant seeks to recover damages on account of injuries inflicted on her and disability caused by the collision of an automobile driven by her mother in which appellant was riding as a passenger with a motor vehicle owned and operated by Frank Kravchuk, and a motor vehicle owned by Lloyd J. Marti, maintained and used for family purposes, and operated by his infant son, Douglas W. Marti. Appellant claims the injuries and disability suffered by her were caused by negligence of appellees. The district court at the close of the evidence sustained the separate motion of each appellee to nonsuit appellant and dismissed the case. Her motion for new trial was denied and she prosecutes this appeal.

The cause of action alleged is: That on March 7, 1953, appellant was a passenger in an automobile driven by her mother in a southerly direction on U. S. Highway No. 6 about 2 miles northeast of Gretna in a prudent and careful manner; that vision to the south was obstructed by the crest of a hill which they were approaching; that about 300 feet south of the crest of the hill a large truck owned by George W. Danner, called Danner herein, was parked within and it entirely occupied the north-bound or east lane of the highway; that it remained in that place for more than 6 hours; that Frank Kravchuk, described herein as Kravchuk, was driving his automobile in a northerly direction on the highway south of the truck; that Douglas W. Marti, hereafter identified as Marti, was driving the automobile of his father Lloyd J. Marti which was owned and was then being used for a family purpose proceeding northward and behind the Kravchuk car; that Kravchuk, followed closely by Marti, while the vision of appellant

and her mother was obscured, drove their respective cars to the left across the center line of the highway, around the Danner truck, and continued in the south-bound lane of the highway until the Kravchuk car was about 200 feet south of and in the vision of the car in which appellant was riding and thereby presented the mother of appellant with a sudden emergency at which time she applied the brakes of the car which she was operating in an attempt to avoid a collision with the Kravchuk and Marti cars; that Kravchuk drove his car onto and against the automobile in which appellant was riding on approximately the center line of the highway, and Marti drove the car he was operating onto and against the car appellant occupied near and slightly east of the center line of the highway; and that the collisions occurred about 200 feet north of the Danner truck.

That Danner was negligent in parking his truck on the paved portion of the highway when it was practical to park it on the shoulder; when by so doing he left less than 15 feet of open pavement for other vehicles; when the said vehicle was not so disabled that it could not be moved off the highway; in leaving his automobile parked in the roadway for an unreasonable length of time, for over 6 hours; and in leaving it parked unattended in the roadway near the crest of the hill without posting any warning signs, flags, or flares as required by law.

That appellees other than Danner were negligent in crossing the center line of the highway near the crest of the hill when the roadway was clearly marked with yellow lines forbidding such crossing; in driving on the lefthand side of the highway when the view was obstructed; in failing to turn back into the north-bound lane of the highway in time to avoid a collision when there was ample time to do so; in approaching the crest of the hill on the lefthand side of the road when the view was obstructed; in failing to keep a proper lookout for other vehicular traffic approaching from the

north; in failing to keep the vehicles being operated under proper control; in failing to yield the right-of-way to the car in which appellant was riding and to south-bound traffic on the highway; in driving their motor vehicles from a position of safety into a position of peril without first determining that such move could be safely made; and that the negligence of appellees caused the injuries and disability of appellant and she asked judgment in a stated amount.

Appellees severally denied the allegations of negligence made against them respectively by appellant, and pleaded that the accident was proximately caused by negligence of Matilda Ricker, the driver of the automobile in which appellant was riding, and the more than slight negligence of appellant contributory to the accident.

The manner of the consideration by this court of a case in the situation of the one presented by the record herein has often been stated. Paxton v. Nichols, 157 Neb. 152, 59 N. W. 2d 184.

Danner was the owner of a 1948 K-6 International semitrailer and tractor combination truck. He was operating it in the transportation of a load of salt from Kanopolis, Kansas, to Omaha. The weight of the truck and load was slightly in excess of 20 tons. He was about 2 miles northeast of Gretna on U. S. Highway No. 6 between 9 and 10 o'clock in the forenoon March 7, 1953, starting up a hill when the truck came to an abrupt stop. He could not move it forward or backward. He attempted to put it in reverse to back it off the paved portion of the highway but could not do so because the operating mechanism would not move. He put a reflector at the rear left corner of the truck, another 100 feet north of it on the left side of the highway, and a third one 100 feet south of the truck on the right side of the highway. He did not have tools appropriate to attempt to remedy the condition that disabled the truck. He secured by telephone from Gretna

a mechanic from the shop in Lincoln where the truck was frequently checked and serviced.

The mechanic and Danner found that a bearing in the pinion gear had broken. This had caused the gears to wedge together sufficiently to lock the differential and this condition made it impossible to operate or move the truck. The differential assembly was entirely removed and taken to Lincoln. The parts necessary to make the required repairs could not be secured there. Danner and the mechanic went to Omaha and finally, but not without much difficulty, secured the parts to make repair of the truck. They returned to where it was when it stalled on the highway in the forenoon, but this was sometime near 5 o'clock and the accident complained of had happened.

The differential was removed from the truck before 12 o'clock noon. Its wheels were then free and the truck could have been removed from the highway. It was then in the exact condition that it was when it was towed from the highway soon after the accident, the cause of this litigation. A tow service near but outside Omaha was called by a State Patrolman after the accident. It provided a 2-ton wrecker and the Danner truck was removed from the highway without difficulty. This could have been accomplished within an hour at any time after the differential was removed.

The Paasch farm referred to in the record was west of the highway at the place on the highway where the Danner truck stalled. North of this was a rock-covered driveway from the highway into the Paasch farm and the buildings thereon. The stalled truck was near the first telephone pole on the east side of the highway and south of the farm driveway. The distance from the center of the driveway to the telephone pole was at least 300 feet. The engineer who measured the distance testified it was 381 feet. There was no proof of any other measurement of it. The collision between the Kravchuk car and the Ricker car in which appel-

lant was a passenger, and the collision between the Marti car and the Ricker car took place a short distance north of the driveway into the Paasch farm. The highway was straight and there was a clear view of the truck for a considerable distance. The day was clear. The paved portion of the highway in the vicinity of the parked truck was dry and all the events important to this case happened during daylight.

The stalling of the Danner truck on the highway because of a failure of its mechanism and permitting it to remain there until the removal of the part of its machinery necessary to free its wheels was not negligence. Haight v. Nelson, 157 Neb. 341, 59 N. W. 2d 576. A failure to use ordinary care to remove the truck from the highway within a reasonable time after its wheels were freed and it was possible to do so would be negligence. Plumb v. Burnham, 151 Neb. 129, 36 N. W. 2d 612.

If it be assumed that Danner was negligent in permitting his truck to remain parked on the highway for an unreasonable time after it could have been removed it does not follow under the circumstances of this case that this act on his part was the proximate cause of the accident, the basis of this case. Any negligence of Danner was antecedent negligence which created a condition existing at the time of the collision of the automobiles and was not a proximate cause thereof. The situation created by the parked truck was merely a circumstance of the accident that occurred at least 300 feet beyond it and not its proximate cause. There is in this case no proof of any causal connection between the parked truck on the highway and the injuries inflicted upon and the disability suffered by appellant.

In Shupe v. County of Antelope, 157 Neb. 374, 59 N. W. 2d 710, it is said: "Proximate cause, as used in the law of negligence, is that cause which in a natural and continuous sequence, unbroken by an efficient intervening cause, produces the injury, and without which the injury would not have occurred. * * * An efficient

intervening cause is a new and independent force which breaks the causal connection between the original wrong and the injury. The cause of an injury is that which actually produces it, while the occasion is that which provides an opportunity for the causal agencies to act. * * * An alleged cause of an accident may sometimes be merely a condition and not the real cause. The activities of inanimate things are usually mere conditions and not causes." See, also, Frerichs v. Eastern Nebraska Public Power Dist., 154 Neb. 777, 49 N. W. 2d 619; Anderson v. Byrd, 133 Neb. 483, 275 N. W. 825; Steenbock v. Omaha Country Club, 110 Neb. 794, 195 N. W. 117.

The situation considered in Geisen v. Luce, 185 Minn. 479, 242 N. W. 8, was that a passenger car was upset by having turned suddenly to the left to avoid striking the rear of another motor vehicle parked on the highway. The court in deciding the parked vehicle was not the proximate cause of the accident said: "Even though the standing of a car on the highway may be unlawful, yet the wrongful standing cannot be the proximate cause of an accident unless it results from the standing. While such standing may be the occasion or condition, it is not in a legal sense a contributing proximate cause of the accident." See, also, Johnson v. Mallory, 123 Neb. 706, 243 N. W. 872; McMillan v. Thompson, 140 Cal. App. 437, 35 P. 2d 419; Kline v. Moyer and Albert, 325 Pa. 357, 191 A. 43, 111 A. L. R. 406; Johnson v. Angretti, 364 Pa. 602, 73 A. 2d 666.

Appellant and her mother, Matilda Ricker, were traveling on U. S. Highway No. 6 from the north towards the place of the accident about 4 o'clock in the afternoon of the day of the accident at an estimated speed of 45 miles an hour. The car was driven by Matilda Ricker. An automobile driven by Eugene Scheef was traveling in front of them a distance of about 150 feet. There was a place in the highway north of the driveway into the Paasch farm, mentioned above, from where a traveler could not see the part of the highway where

the truck was parked or where the collision occurred but from two or three car lengths north of the driveway there was a clear view towards the south to and far beyond where the Danner truck was parked. There was a yellow line east of but near the center line of the paved portion of the highway extending south of the parked truck to the north a considerable distance beyond the Paasch driveway.

When the driver of the Scheef car was north of the driveway but could see to the south he saw two automobiles and a truck proceeding north in the west lane of the highway. The car nearest him was about six car lengths south of him and it was starting to move into the east lane. The second car and the truck were in the west lane and the truck was immediately west of the stalled truck. The driver of the Scheef car firmly applied the brakes on it, slowed down considerably but did not come to a dead stop, turned to the west so that the west side of his car was on the right shoulder of the highway, and continued south past the approaching cars and truck and the parked truck.

The night before the accident snow had fallen. The shoulders of the highway and the ground generally were wet and muddy. There was an unimproved dirt lane into the Paasch farm a short distance north of the driveway which was surfaced with rock. The use of the dirt lane had carried wet mud onto the paved highway so that it was wet, slick, and muddy from the lane south toward the driveway. The Ricker car as it traveled south towards the location of the Paasch driveway was on a descending grade and the driver applied the brakes and decreased the speed of the car. The distance then between the Ricker car and the Scheef car is not shown. The driver of the Ricker car saw that the brakes on the Scheef car were applied and it slowed up but did not entirely stop. The Ricker car was then on the muddy and slick part of the highway. The driver of it saw two cars and a truck driving north in the west lane

of the highway towards her. The nearest was the Kravchuk car, the second was the Marti car, and the third was a Watson Brothers truck. When she saw the vehicles proceeding north in the west lane and that the driver of the car immediately ahead of her had suddenly applied the brakes on his car she "slammed" on the brakes of the car she was driving. She testified that when she saw she was going to hit either the Scheef car ahead of her or the other vehicles she "slammed" on the brakes of the car she was driving. The Kravchuk car was in the east lane and the extreme rear portion of it was over the center line of the highway. The Ricker car skidded to the center line of the highway and the left front of it and the left rear of the Kravchuk car collided at the center line of the highway. The Marti car was immediately to the rear of the Kravchuk car, was pulling to the northeast on an angle, and the left side of it and the front of the Ricker car collided at least 1 foot east of the center line of the highway. The collisions were each a short distance north of the driveway into the Paasch farm. Appellant was injured by the collisions.

The proof produced by appellant established that no part of the Kravchuk car or the Marti car was in the west lane of the highway at the time of the contact of the Ricker car with them. The contact of the Ricker car with the Kravchuk car was at the center line of the highway. The contact of the Ricker car with the Marti car occurred east of the center line of the highway. If the Ricker car had been operated in its proper lane there would and could have been no collision of any of the cars, no accident, and no injuries. If the negligence of the driver of an automobile in which plaintiff was riding as a passenger was the sole proximate cause of the collision in which plaintiff was injured he cannot recover from a third person for such injury. Bergendahl v. Rabeler, 133 Neb. 699, 276 N. W. 673; Shiers v. Cowgill, 157 Neb. 265, 59 N. W. 2d 407. The lack of control of the Ricker car necessitated the sudden and

vigorous application of its brakes to prevent it from colliding with the Scheef car. This is what caused the Ricker car to skid to the left and against the two cars in the east lane of the highway.

The interference with the continued progress of the Ricker car as it was traveling south in the west lane was the Scheef car that was preceding it and the decrease of the speed of the Scheef car. The operator of the Ricker car was obligated to anticipate any change of speed of the Scheef car and that she might have to quickly accommodate herself to the changed situation. Ziskovsky v. Miller, 120 Neb. 255, 231 N. W. 809; Haight v. Nelson, *supra*. It is, with exceptions not applicable to this case, negligence for a motorist to drive a motor vehicle on a public highway, at any time, at a speed or in such manner that it cannot be stopped, its course changed or varied in time to avoid a colliison with an obstruction discernible within the range of his view ahead. Armer v. Omaha & C. B. St. Ry. Co., 151 Neb. 431, 37 N. W. 2d 607.

When the driver of the Scheef car which was preceding the Ricker car was at the place in the highway where he had a view to the south where the Danner truck was parked he was then more than 400 feet north of the truck. The Kravchuk and Marti cars had then passed the truck. The former was returning to the east lane of the highway and was about 90 feet south of the Scheef car. It is a justified conclusion that when the Kravchuk car and the Marti car entered the west lane to pass the parked truck that the west lane was free of traffic to the north as far as the highway was visible and this was as much as 400 feet. Appellant was not entitled to recover against either Kravchuk or Marti until she produced evidence that they were or one of them was guilty of negligence that proximately caused or contributed to the cause of the accident. Bergerdahl v. Rabeler, *supra*.

The trial court was correct in concluding that as a

matter of law that the proximate cause of the accident was not negligence of any of the appellees. The judgment should be and it is affirmed.

AFFIRMED.

CLIFTON THOMPSON, PLAINTIFF IN ERROR, V. STATE OF NEBRASKA, DEFENDANT IN ERROR.
68 N. W. 2d 267

Filed February 4, 1955. No. 33621.

1. **Criminal Law.** No form of insanity is recognized as a defense to a criminal action, unless it affects the mind of the accused to such an extent that it renders him incapable of distinguishing between right and wrong with reference to the act committed.
2. **Witnesses: Evidence.** A hypothetical question which consists of a recitation of a succession of facts containing nothing subject to, or furnishing a basis for, an expert opinion is improper and should be excluded by the trial court.
3. **Criminal Law.** Evidence of the commitment of a defendant to a hospital for the insane raises no presumption that the accused was at the time in question insane in the sense that he was not accountable for the act charged.
4. ———. One who has the capacity to distinguish between right and wrong with respect to a criminal act at the time of committing it is legally sane.
5. ———. Where the punishment of an offense created by statute is left to the discretion of a court, to be exercised within certain prescribed limits, a sentence imposed within such limits will not be disturbed unless there appears to be an abuse of such discretion.

ERROR to the district court for Douglas County: L. ROSS NEWKIRK, JUDGE. *Affirmed.*

Joseph M. Lovely, Adolph Q. Wolf, and *Thomas J. Walsh,* for plaintiff in error.

Clarence S. Beck, Attorney General, and *Homer G. Hamilton,* for defendant in error.

Heard before SIMMONS, C. J., CARTER, MESSMORE, YEAGER, CHAPPELL, WENKE, and BOSLAUGH, JJ.

MESSMORE, J.

This is a criminal action brought in the district court for Douglas County wherein the defendant Clifton Thompson was charged in an information under section 28-410, R. R. S. 1943, that on or about September 22, 1953, he maliciously shot Alberta Thompson with the intent to kill, wound, and maim. The defendant was duly tried and found guilty by a verdict of a jury. Following the overruling of his motion for new trial, the defendant was sentenced to serve a term of 10 years in the State Penitentiary. The defendant, as plaintiff in error, brings the case to this court for review, and will hereinafter be referred to as the defendant.

There was a plea of not guilty to the offense as charged, and under the plea the defense presented and argued was that of insanity.

There is no doubt that the defendant did, on September 22, 1953, shoot his wife, Alberta Thompson, with the intent to kill, wound, or maim her. The evidence produced by the State to substantiate the charge was sufficient and uncontradicted. No assignment of error is made in this court that the evidence was insufficient to support the charge set forth in the information.

The defendant assigns as error the following: (1) That the trial court erred in holding in effect that there had been no evidence adduced by defendant or the State which tended to show or establish that defendant was legally insane when he shot his wife, Alberta Thompson, on September 22, 1953. (2) That the trial court committed prejudicial error in failing to submit to the jury on its own motion and by proper instructions the question of whether the State had established the sanity of the defendant beyond a reasonable doubt. (3) That the sentence of 10 years imprisonment imposed on the defendant by the trial court was excessive.

The record discloses that the defendant and his wife, Alberta Thompson, have been married for 13 years. During the last year or two of their married life, the

defendant was employed as a chair car porter on a railroad. They resided at 2302 North Twenty-ninth Street in Omaha, Nebraska, since 1945. In May 1953, they separated. There was no quarrel between them at that time, the defendant just left the house. The reason given by the defendant's wife for the separation was that she was tired of the defendant's drinking and gambling. She further testified that during their married life they had quarreled on at least six occasions when there was some violence between them, and that when the defendant was under the influence of intoxicating liquor he would want to fight. There is evidence by witnesses other than the defendant's wife that the defendant drank intoxicating liquors stronger than beer on occasions.

On September 22, 1953, the defendant's wife returned home from work about 4:30 p. m. Just after that time she had a conversation with the defendant to the effect that he had left some overcoats at the house and desired to come and get them. His wife had no objection. About 6:45 p. m., the defendant arrived at the house and was met by his wife who answered the door. The defendant asked how she felt and she said "Fine," and gave him the overcoats. The defendant started off the porch. His wife hooked the screen door and went back into the house. The defendant returned and asked her for a drink of water. She went to the kitchen to get it, and upon her return the defendant had forced the screen door and was standing inside the house. The defendant then asked his wife if she was going to take him back, to which she replied "No." The defendant pulled a gun from under his coat and fired a shot, hitting his wife in the shoulder. She turned and ran out of the back door around to the front of the house and then diagonally across the street. She heard shots fired. The second and third shots did not hit her. The fourth shot hit her in the middle of the left back and knocked her to her knees as she was crossing the street.

The fifth shot fired caused a deep laceration of the left forefinger. The defendant, at that time, was 6 to 8 feet behind her. She did not remain on her knees very long because the defendant was quite close to her. She came to rest in a neighbor's yard. The defendant caught up with her and started beating her on the side of the head with the gun. Then there was a noise, and the defendant ran away. The defendant's wife was taken to the hospital.

The defendant's wife further testified that she had on occasions seen her husband consume intoxicating liquor and become under the influence of liquor during their married life; and that on September 22, 1953, when he came to the house that evening he walked steady, his speech was clear, he did not smell of liquor, and in her opinion he was not under the influence of liquor. In March 1951, she filed a complaint against the defendant for the excessive use of alcoholic liquor, and he was confined in the Douglas County Hospital for about 3 weeks as an alcoholic.

A witness who lived directly north of where the defendant's wife lived, testified that he had known the defendant and his wife since April or May 1945. During the last week in August 1953, the defendant spent two nights with this witness. He came to the house and asked if he could leave his grip for awhile. He showed this witness a .38 caliber revolver and said he was going to kill his wife, that "he was going to settle with the woman next door." There is some evidence by this witness that the defendant had been drinking, but apparently not to the extent that he was helpless in any respect.

The defendant testified that he was 43 years of age; that he had once been convicted of a felony; that on September 22, 1953, he consumed about five bottles of Stite beer which has a greater alcoholic content than other beer; and that he consumed this beer in a 3-hour period. The record is not exactly clear which 3 hours

of the day, but apparently the defendant had finished the last of this Stite beer about 7 o'clock in the evening.

Dr. Chester H. Farrell testified that he specialized in neuropsychiatry, and had served as attending neuropsychiatrist at the Douglas County Hospital since 1946. In March 1951, the defendant had been a patient in the neuropsychiatry ward at the hospital for approximately a month. In the course of his duties, he had examined the defendant. At the time the defendant was brought to the hospital on the complaint of his wife, he was mentally ill. There was some question as to whether his attitude was due to drink or due to mental disturbances. There was so much question that a second examination was held, and a second report made by Dr. Young in which he expressed the opinion that the defendant's mental condition appeared to be the result of alcoholism, and a final diagnosis of mental illness as a result of alcoholism was made. The defendant was released from the hospital on parole. This witness did not see the defendant again until just the day before trial on March 14, 1954. He talked to the defendant in the county jail for about 45 minutes. As a result of this meeting the doctor believed the defendant had a type of personality that expressed itself in an unusual amount of suspiciousness. The technical term applied is that of a "paranoid personality." The defendant suspected that there was an organization of some of his race that was against him. He could not explain why, but he felt that there had been a definite organization, and believed that his wife had made an attempt to get other people of his race to turn against him. The doctor felt that this was probably delusional, and testified that it would not be unusual for alcoholic beverages to aggravate this type of personality and to reinforce or to make this type of suspiciousness more severe. This witness further testified that in his opinion a paranoid ideation or paranoid thinking contituted a permanent part of the defendant's personality and attitude, and as an

emotional tension or strain became more severe, a person with a paranoid personality would have a tendency to do one of two things: (1) They might run off because they felt that they were overwhelmed and could not fight back, or (2) they might strike out blindly and be aggressive. In any event, this evidence in no way reflects on the mental condition of the defendant on September 22, 1953, nor does it purport to prove or disprove whether the defendant knew right from wrong on that date.

There were hypothetical questions propounded to the doctor. In one of these questions it was stated that the defendant's age was 44 years, that he had been married for a period of 13 years, was a railroad employee, had been separated from his wife since May 1953, and attempted a reconciliation; that he went to the home of his wife on September 22, 1953, about 8 o'clock; that he had been drinking about five bottles of Stite beer during the period from 4 to 7 o'clock; that he requested a reconciliation with his wife and had been refused; and that he then produced a gun, fired it at his wife and wounded her three times, and ran after her and struck her with the gun. The doctor was then asked to give his opinion if, at that time, the defendant was capable of distinguishing between right and wrong, to which there was proper objection made.

It was contended by the defendant that the facts relative to his being in the county hospital, as heretofore stated, by necessity must be considered as shown by the evidence.

The other hypothetical questions were not quite as extensive as that set out above.

The facts recited in the hypothetical question were not such as would afford a proper basis for an opinion that the defendant was insane at the time of the commission of the crime. Every event detailed therein was consistent with a finding of sanity. See Lyons v. State, 156 Neb. 550, 57 N. W. 2d 82.

This expert witness was unable to give an affirmative answer as to what manner the consumption of five bottles of Stite beer by the defendant had on his mentality because tolerance in the use of alcoholic beverages differs in individuals. This witness did testify on cross-examination that he did not know the state of the defendant's mind on September 22, 1953, the day of the commission of the offense as herein stated.

The following authorities are pertinent to a determination of this appeal.

All men are presumed to be sane, but if, in the trial of a criminal case, any evidence tending to show or establish defendant's insanity is adduced by either the defense or the State, then the burden is upon the State to convince the jury of the sanity of the defendant beyond a reasonable doubt as one of the elements necessary to establish guilt. To cast upon the State the burden of proving sanity of the defendant, it is only requisite that there be some evidence tending to prove insanity. See, Snider v. State, 56 Neb. 309, 76 N. W. 574; Davis v. State, 90 Neb. 361, 133 N. W. 406; Fisher v. State, 140 Neb. 216, 299 N. W. 501.

The test of insanity, urged as a defense to a charge of crime, is the capacity of the accused to understand the nature of the act committed and his ability to distinguish between right and wrong with respect to it. Where a person is so diseased in mind, at the time the act is charged to have been committed, that he incapable of comprehending the nature of the act and is unable to distinguish between right and wrong with respect to it, he is not accountable, howsoever such insanity may be manifested, whether by insane delusion or in any other manner. See Kraus v. State, 108 Neb. 331, 187 N. W. 895.

In Fisher v. State, 154 Neb. 166, 47 N. W. 2d 349, this court held that the law recognizes no form of insanity or uncontrolled impulse, even though the mental faculties are disordered or deranged, which provides im-

munity from punishment for a criminal act, if the person committing the act has the capacity to know what he is doing and to understand that his act is wrong.

One who has the capacity to distinguish between right and wrong with respect to a criminal act at the time of committing it is legally sane. See, Shannon v. State, 111 Neb. 457, 196 N. W. 635; Williams v. State, 115 Neb. 277, 212 N. W. 606.

Evidence of the commitment of a defendant to a hospital for the insane raises no presumption that the accused was at the time in question insane in the sense that he was not accountable for the act charged. Fisher v. State, 140 Neb. 216, 299 N. W. 501. See, also, Linder v. State, 156 Neb. 504, 56 N. W. 2d 734.

The defendant has intimated that the issue of intoxication should have been submitted and considered by the jury under proper instructions.

The rule as stated in Tvrz v. State, 154 Neb. 641, 48 N. W. 2d 761, is as follows: "'Intoxication is no justification or excuse for crime; but evidence of excessive intoxication by which the party is wholly deprived of reason, if the intoxication was not indulged in to commit crime, may be submitted to the jury for it to consider whether in fact a crime had been committed, or to determine the degree where the offense consists of several degrees.'"

There is no evidence that the defendant was intoxicated at the time the crime was committed. His testimony is that he had consumed about five bottles of Stite beer. He made no claim in his testimony that he was intoxicated at the time the crime was committed. We believe the undisputed testimony in the record clearly indicates that the defendant has no valid defense on the ground of intoxication or excessive use of intoxicating liquors within the contemplation of the rule as stated above.

We conclude, in the absence of any evidence that the defendant was legally insane at the time of the com-

mission of the offense it is presumed that he was sane. Under the facts in the instant case, the trial judge did not commit prejudicial error in refusing to submit the issue of whether or not the defendant was insane to the jury.

This brings us to the question as to whether or not the sentence was excessive.

The long-followed rule is that where the punishment of an offense created by statute is left to the discretion of a court, to be exercised within certain prescribed limits, a sentence imposed within such limits will not be disturbed unless there appears to be an abuse of such discretion. See, Young v. State, 155 Neb. 261, 51 N. W. 2d 326; Taylor v. State, *ante* p. 210, 66 N. W. 2d 514.

We find no abuse of discretion here.

For the reasons given in this opinion the judgment of the trial court is affirmed.

AFFIRMED.

SCHOOL DISTRICT NO. 39 OF WASHINGTON COUNTY, NEBRASKA, APPELLANT, V. FREEMAN DECKER, SUPERINTENDENT OF PUBLIC INSTRUCTION, APPELLEE.

68 N. W. 2d 354

Filed February 4, 1955. No. 33624.

1. **Constitutional Law: Schools and School Districts.** The last sentence of section 79-307, R. R. S. 1943, is unconstitutional as a delegation of legislative authority in violation of Article II, section 1, and Article III, section 1, Constitution of Nebraska.
2. ———: ———. Therefore, Rule III-3 of Section B, Criteria for Approved Schools, promulgated by the Superintendent of Public Instruction as of July 1, 1952, under authority purportedly granted by the last sentence of section 79-307, R. R. S. 1943, is invalid and unenforceable.

APPEAL from the district court for Lancaster County:

HARRY R. ANKENY, JUDGE. *Reversed and remanded with directions.*

Van Pelt, Marti, & O'Gara, Roy I. Anderson, and *Emory P. Burnett,* for appellant.

Clarence S. Beck, Attorney General, and *Robert V. Hoagland,* for appellee.

Heard before SIMMONS, C. J., CARTER, MESSMORE, YEAGER, CHAPPELL, WENKE, and BOSLAUGH, JJ.

CHAPPELL, J.

Plaintiff, School District No. 39 of Washington County, generally known as Rose Hill School District, is a rural Class II school district conducting both elementary and ninth and tenth high school grades in Washington County. It brought this action in equity to enjoin the enforcement of Rule III-3 of Section B, "Criteria for Approved Schools" promulgated as of July 1, 1952, by defendant Freeman Decker, then Superintendent of Public Instruction, under purported authority granted him by the last sentence of section 79-307, R. R. S. 1943. Such section provides: "The Superintendent of Public Instruction shall prescribe forms for making all reports and regulations for all proceedings under the general school laws of the state. *He shall also formulate rules and regulations for the approval of all high schools for the collection of free high school tuition money.*" (Italics supplied.)

Rule III-3 also provides: "The teacher-pupil ratio for high school (grades 9-12) shall not be less than 1-5."

On May 12, 1953, defendant had removed plaintiff's high school from the list of approved schools for the school year 1953-1954 because its teacher-pupil ratio was "1-4 which is less than the minimum standards" required by Rule III-3. Concededly, such removal made plaintiff ineligible for collection of free high school tuition for nonresident pupils, deprived it of exemption

from the free high school tax levy together with the right to be considered for accreditation status, and, as stated by defendant, "so far as our records are concerned, there is no high school in Rose Hill."

Insofar as important here, plaintiff sought injunctive relief primarily upon the ground that the last sentence of section 79-307, R. R. S. 1943, was an unconstitutional and invalid delegation of legislative authority and power to an executive or administrative officer of the state. In other words, plaintiff contended that Rule III-3 was invalid and unenforceable because such statute granted defendant authority to "formulate rules and regulations for the approval of all high schools for the collection of free high school tuition money" without therein or otherwise in any statute in pari materia therewith providing any legislative numerical limitations, standards, rules, or criteria for the guidance of defendant in so doing.

Upon issues duly joined there was a hearing in the district court whereat evidence was adduced and a judgment was rendered finding and adjudging the issues generally for defendant and against plaintiff. In doing so, it was found and adjudged that section 79-307, R. R. S. 1943, was a valid, legal statute, and not unconstitutional as a delegation of legislative powers, and that Rule III-3 promulgated thereunder was valid and enforceable.

In that connection, section 79-1247.02, R. R. S. 1943, was also found to be constitutional. However, that question was not made an issue either factually or by any pleading filed by the parties herein. Such section was also evidently relied upon by the trial court in arriving at its final conclusions, and for the purpose of argument only, we may assume its constitutionality. However, such section deals solely with the accreditation and classification of elementary and secondary schools by an accreditation committee appointed by the Superintendent of Public Instruction. We conclude that it has

no controlling relation to the validity of section 79-307, R. R. S. 1943, which deals solely with approval by the Superintendent of Public Instruction of all high schools for the collection of free high school tuition. In fact, section 79-1247.02, R. R. S. 1943, clearly provides that no school is to be considered by such accreditation committee for accreditation status which has not first been approved by the Superintendent of Public Instruction. Thus, accreditation and approval are two separate and entirely different duties, imposed by separate statutes upon different officers. In that regard, defendant testified: "Q- Approval and accreditation are not the same? A- Approval and accreditation are not the same; that is right. Q- There are many schools that are approved that might not be accredited? A- That is right. Q- And when discussing this case here you understand, I believe, and I state this to be my understanding, we are not talking about accredited? A- That is right. It doesn't even enter into the picture, so far as I am concerned. Q- We are only talking about approval. A- That is right."

Plaintiff's motion for new trial was overruled, and it appealed, assigning substantially that the judgment of the trial court was contrary to the evidence and the law. We sustain the assignment.

The first sentence of section 79-307, R. R. S. 1943, has existed substantially in its present form since the enactment of Laws of Nebraska, 1881, Chapter 78, Subdivision VIII, section 5, page 363. However, the last sentence of section 79-307, R. R. S. 1943, heretofore italicized, was no part thereof until the enactment of Laws of Nebraska, 1949, Chapter 256, Article III, section 28, page 701. Thus, the two sentences are entirely separable, and the enactment of the second could not have been the inducement for enactment of the first. Concededly, constitutionality of the first sentence is not questioned and is not an issue in this case. Only the constitutionality of the second sentence and the

validity of Rule III-3 promulgated thereunder are assailed by plaintiff.

As early as Scott v. Flowers, 61 Neb. 620, 85 N. W. 857, this court held: "Where there is a conflict between an act of the legislature and the constitution of the state, the statute must yield to the extent of the repugnancy, but no further.

"If, after striking out the unconstitutional part of a statute, the residue is intelligible, complete and capable of execution, it will be upheld and enforced, except in cases where it is apparent that the rejected part was an inducement to the adoption of the remainder."

For reasons hereinafter set forth, we conclude that only the last sentence of section 79-307, R. R. S. 1943, is unconstitutional as a delegation of legislative authority in violation of Article II, section 1, and Article III, section 1, Constitution of Nebraska, and that Rule III-3 promulgated by defendant is invalid and unenforceable because neither section 79-307, R. R. S. 1943, nor any other statute in pari materia therewith contains any limitations or standards making approval of high schools dependent in any manner upon the number of its students as defendant has legislatively attempted to do. In that connection, defendant has called our attention to sections 79-328 and 79-701, R. S. Supp., 1953. However, such sections did not become effective until September 14, 1953, and thus have no controlling application here.

The evidence was not in dispute. Plaintiff's high school teacher was qualified, and "was doing some fine work as far as classroom teaching was concerned." Plaintiff's school grounds, building, and equipment met every requirement. All physical improvements suggested by defendant had been duly perfected by plaintiff. In fact, by so doing plaintiff had expended $3,646.75 during the last 5 years. Photographs received, together with other competent evidence, demonstrate that the district owned an excellent, fully equipped, and attractive physical plant, modern throughout. On May 8,

1953, a member of defendant's staff wrote plaintiff's principal that "consistent with the Department's policy" it was impossible to recommend approval of their high school for the next year because: "The teacher-pupil ratio for high school is 1-4, which is less than the minimum standards for approval as set forth in Section B of the bulletin, *Approval and Accreditation of Nebraska Schools.*" Thereafter, on May 12, 1953, defendant notified plaintiff's officers that its high school had been removed from the list of approved schools for the school year 1953-1954 because under "Section B (page 8, bulletin, Approval and Accreditation of Nebraska Schools) III-3 The teacher-pupil ratio for high school is 1-4 which is less than the minimum standards for approval as indicated."

Plaintiff's school is located near the center of Washington County. The district owns no means for pupil transportation and the nearest high school having ninth and tenth grades is 5 miles or more therefrom over roads that are often impassable. Further, it is 11 miles or more to the Blair high school over roads that are sometimes impassable during winter or spring, and that district owns no means for pupil transportation.

Plaintiff had five or more students in its ninth and tenth grades during 1951-1952; four students during 1952-1953; and five students during 1953-1954, with prospects for more in the near future. The district consists of all of four sections and parts of four other sections of land in Washington County, and had an assessed valuation of $565,295 for 1953, with expenses of $6,356.66, requiring a tax levy of 14.9 mills.

As disclosed by the record, defendant admitted that there is no magic in the ratio of 1-5 required by Rule III-3, and that it could as well have been higher or lower, but should be higher. As a matter of fact, defendant also admitted that there are only eight ninth and tenth grade high schools left in Nebraska but that in the recent past he had waived the ratio of 1-5 for

two or three other like high schools in Washington County because they had prospects for more students in the future, or had suggested the possibility of reorganization.

Thus the Superintendent of Public Instruction has been delegated a free hand without legislative limitations or standards to make or change at will any numerical ratio or standard required for approval of high schools for the collection of free high school tuition money when it would have been a simple matter for the Legislature, which had the power and authority, to have incorporated limits and standards in the statute. As a consequence, without questioning the motives or ability of the Superintendent of Public Instruction, there might well be approval of some high schools upon one standard and a withholding of approval from others by a qualification of such standard or by virtue of another. Thus, defendant had arbitrary power over the life or death of all high schools in this state and the preservation or destruction of their property and the grant or denial of free high school revenue, dependent upon the granting or refusal of approval.

Article II, section 1, Constitution of Nebraska provides: "The powers of the government of this state are divided into three distinct departments, the legislative, executive and judicial, and no person or collection of persons being one of these departments, shall exercise any power properly belonging to either of the others, except as hereinafter expressly directed or permitted."

Also, Article III, section 1, Constitution of Nebraska, provides in part: "* * * the legislative authority of the state shall be vested in a Legislature consisting of one chamber."

Also, Article VII, section 6, Constitution of Nebraska, provides: "The legislature shall provide for the free instruction in the common schools of this state of all persons between the ages of five and twenty-one years."

And, Article XVII, section 6, Constitution of Nebraska, provides: "The Legislature shall pass all laws necessary to carry into effect the provisions of this constitution."

In 47 Am. Jur., Schools, § 9, p. 302, it is said: "Generally speaking, school laws must comply with the rules governing the validity of statutes, and must not violate constitutional requirements applicable to all laws alike, such as those relating to title and subject matter, or prohibiting special or local legislation. So also, general rules governing the effect of the partial invalidity of statutes have been applied to school laws.

"Rules for the construction of statutes generally apply in the case of school laws. The rule has been stated that laws for the conduct and government of public educational institutions should be construed so as best to subserve the purpose intended by them, provided well-established rules of construction are observed and the rights of citizens not violated."

As said in 42 Am. Jur., Public Administrative Law, § 45, p. 342, citing authorities from many states: "It is a fundamental principle of our system of government that the rights of men are to be determined by the law itself, and not by the let or leave of administrative officers or bureaus. This principle ought not to be surrendered for convenience, or in effect nullified for the sake of expediency. However, it is impossible for the legislature to deal directly with the host of details in the complex conditions on which it legislates, and when the legislature states the purpose of the law and sets up standards to guide the agency which is to administer it, there is no constitutional objection to vesting discretion as to its execution in the administrators. * * * A statute which in effect reposes an absolute, unregulated, and undefined discretion in an administrative body bestows arbitrary powers and is an unlawful delegation of legislative powers. The presumption that an officer will not act arbitrarily but will exercise sound judgment and good faith cannot sustain a delegation of unregu-

lated discretion." Also, as said in 42 Am. Jur., Public Administrative Law, § 49, p. 353, citing authorities from many states: "The legislature, having declared its policy and purpose and provided standards for the exercise of the power, may confer upon administrative authorities the power to enact rules and regulations to promote the purpose and spirit of the legislation and carry it into effect, and, even though such rules and regulations are given the force and effect of law, there is no violation of the constitutional inhibition against delegation of the legislative function."

Likewise, in Board of Regents v. County of Lancaster, 154 Neb. 398, 48 N. W. 2d 221, this court said: "The exercise of a legislatively-delegated authority to make rules to carry out an expressed legislative purpose, or for the complete operation and enforcement of a law with designated limitations, is not an exclusive legislative power."

Smithberger v. Banning, 129 Neb. 651, 262 N. W. 492, 100 A. L. R. 686, involved the constitutionality of emergency relief measure and companion acts creating a State Assistance Committee and providing for raising of funds to be used for the relief of the unemployed or aged persons, and for other described purposes. Our basis for declaring the unconstitutionality thereof was that the Legislature had delegated legislative authority to the State Assistance Committee and the Board of Educational Lands and Funds in contravention of Article II, section 1, and Article III, section 1, Constitution of Nebraska. In that opinion, after citing and quoting from numerous authorities, this court said: "The above cases have particular application in principle to the case at bar. In the Nebraska acts, there are no limitations, standards, rules of guidance or criterion for the guidance of the state assistance committee and the board of educational lands and funds in allocating funds for old age assistance, unemployment relief, mothers' health, unemployment insurance, and other forms of relief

therein enumerated. There is no requirement that the administrators of the acts find certain facts in determining for which of the various purposes allocations should be made and no basis for determining the amount to be allocated to each or any of the purposes therein set forth. This is all left to the discretion of the state assistance committee. Under the authorities hereinbefore cited, this constitutes a delegation of legislative functions to an administrative board." We have a comparable situation in the case at bar.

In Lennox v. Housing Authority of City of Omaha, 137 Neb. 582, 290 N. W. 451, this court held: "The granting of administrative discretion is not an unconstitutional delegation of a legislative function, where adequate standards to guide the exercise of such discretion are provided for by the statute authorizing it." See, also, Nickel v. School Board of Axtell, 157 Neb. 813, 61 N. W. 2d 566; School District No. 49 v. School District No. 65-R, *ante* p. 262, 66 N. W. 2d 561.

As stated in People v. Yonker, 351 Ill. 139, 184 N. E. 228: "It is true, as this court has frequently said, the method and manner of enforcing a law must of necessity be left to the reasonable discretion of administrative officers, but an act of the Legislature which vests in such officers the discretion to determine what the law is, or to apply it to one and refuse its application to another in like circumstances, is void as an unwarranted delegation of legislative authority."

Also, as stated in People v. Federal Surety Co., 336 Ill. 472, 168 N. E. 401: "All the legislative power of the State is vested in the General Assembly, and it may not divest itself of its proper functions or delegate its general legislative authority to the discretion of administrative officers so as to give to them the power to determine whether the law shall or shall not be enforced with reference to individuals in the same situation, without fixed rules or limitation for the exercise of such discretion. The legislature cannot delegate arbitrary power

to any executive officer to say that under the same circumstances one rule of law shall apply to one or some individuals and another rule to others."

There are other authorities of like tenor, but they are too numerous to cite here. In that connection, we discover that the authorities relied upon by defendant are generally distinguishable upon the facts and applicable law. We have considered the question of constitutionality in the light of the presumption of validity to which a legislative act is entitled. Nevertheless, we conclude that the last sentence of section 79-307, R. R. S. 1943, contravenes Article II, section 1, and Article III, section 1, Constitution of Nebraska, because such sentence delegates legislative authority to the Superintendent of Public Instruction.

Other questions were presented and argued by briefs filed herein, but as we view it, they require no discussion.

For reasons heretofore set forth, the judgment of the trial court should be and hereby is reversed and the cause is remanded with directions to render judgment for plaintiff in conformity with this opinion. All costs are taxed to defendant.

REVERSED AND REMANDED WITH DIRECTIONS.

MCGRAW ELECTRIC COMPANY, A CORPORATION, APPELLANT, V. LEWIS & SMITH DRUG CO., INC., A CORPORATION, APPELLEE.

68 N. W. 2d 608

Filed February 11, 1955. No. 33593.

1. **Appeal and Error.** In an equity case this court will consider the evidence de novo and arrive at an independent conclusion.
2. **Constitutional Law: Statutes.** The Fair Trade Act is not violative of the Constitution of the United States but is violative of the Sherman Anti-Trust Act.
3. ———: ———. Section 59-1105, R. R. S. 1943, of the Fair

Trade Act is unconstitutional for the reason that it grants special privileges and immunities to such persons and parties as are described in section 59-1102, R. R. S. 1943, of the act.

4. ———: ———. Section 59-1105, R. R. S. 1943, of the Fair Trade Act is unconstitutional for the reason that, within constitutional meaning, it deprives of liberty and property without due process of law.
5. ———: ———. Section 59-1105, R. R. S. 1943, of the Fair Trade Act is unconstitutional for the reason that it confers upon persons the power to fix and enforce prices of merchandise without impositions of standards therefor.
6. ———: ———. Section 59-1105, R. R. S. 1943, of the Fair Trade Act is unconstitutional for the reason that there is an absence of anything apparent in the act or its title indicating that the purpose of the section is in the public interest.
7. **Statutes.** The question of whether or not legislation is in the public interest is ordinarily one for legislative determination, but the Legislature may not, under the guise of regulation in the public interest, impose conditions which are on their face unreasonable, arbitrary, discriminatory, or confiscatory.
8. **Constitutional Law: Statutes.** The Legislature may not constitutionally, under the guise of public interest, grant power without control or check, which may be exercised at will, with or without reason, arbitrarily or capriciously.
9. ———: ———. If an unconstitutional section of an act was an inducement to the passage of an entire act the entire act is unconstitutional.
10. ———: ———. If an act as originally passed was unconstitutional because it contained matter different from that expressed in the title, or referred to more than one subject matter, it becomes valid law, if otherwise constitutional, on adoption by the Legislature and incorporation into a general revision without reference to title as originally enacted.
11. ———: ———. An act invalid before inclusion in a revision by reason of the fact that it was induced by an unconstitutional section of the act remains invalid and is not aided or revived by incorporation into an authorized revision.

APPEAL from the district court for Douglas County: JACKSON B. CHASE and JAMES M. PATTON, JUDGES. *Affirmed.*

Shotwell, Vance & Marchetti, Lynn A. Williams, and *John H. Holm,* for appellant.

Swarr, May, Royce, Smith & Story, for appellee.

Herman T. VanMell, Jack W. Marer, and *Samuel V. Cooper,* amicus curiae.

Heard before SIMMONS, C. J., CARTER, MESSMORE, YEAGER, CHAPPELL, WENKE, and BOSLAUGH, JJ.

YEAGER, J.

This is an action in equity by McGraw Electric Company, a corporation, plaintiff and appellant, against Lewis & Smith Drug Co., Inc., a corporation, defendant and appellee, instituted and tried in the district court for Douglas County, Nebraska. The case was tried to the court at the conclusion of which a decree was rendered in favor of the defendant and against the plaintiff. Following the rendition of decree a motion for new trial was duly made and regularly overruled. From the decree and the order overruling the motion for new trial the plaintiff has appealed.

In order that a comprehensive understanding may be had of the issues and the matters involved in this appeal a rather lengthy exposition of the issues made by the pleadings and of the subject matter of the controversy appears to be necessary.

The Legislature of Nebraska at its regular session in the year 1937 enacted what was designated as the Fair Trade Act. The act was otherwise designated as chapter 136 of the Laws of 1937. It contained 13 sections, only 9 of which are of concern here. Eight sections now appear as sections 59-1101 to 59-1108, R. R. S. 1943, and the other appears in the revision of 1943 as section 59-801, R. R. S. 1943. The reason for this 9th section being placed as it is in the revision is that the act, except this one section, was new, whereas this section was amendatory of section 59-801, Comp. St. 1929, which was a part of the statutory article relating to acts and practices in unlawful restraint of trade. There have been no amendments to the act since its original passage. Statutory references hereinafter will be to the sections as they appear in the 1943 revision. Reference to the

1943 revision and the reissue thereof will not be repeated.

The title to the act as it was originally passed is as follows: "AN ACT to protect trade-mark owners, producers, wholesalers and the general public against injurious and uneconomic practices in the distribution of competitive commodities bearing a distinguishing trade-mark, brand or name through the use of voluntary contracts establishing minimum re-sale prices and providing for refusal to sell such commodities unless such minimum re-sale prices are observed; to amend Section 59-801, Compiled Statutes of Nebraska, 1929; to repeal said original section; and to declare an emergency."

Section 59-1101 is a definition of terms but otherwise it is not significant herein.

Stated positively and plainly, instead of negatively as in the statute, section 59-1102 provides that contracts establishing a minimum price of commodities by the producer or wholesaler of commodities themselves or the labels or containers of commodities which bear the trade-mark, brand, or name of the producer or wholesaler, which commodities are in free and open competition with commodities of the same general class produced and distributed by others, shall be lawful. There are other provisions in the section but they are not of immediate concern.

Section 59-1103 provides that no contract contemplated by section 59-1102 shall be entered into by anyone other than the owner of the trade-mark, brand, or name used in connection with such commodity or by a wholesaler specifically authorized so to do by the owner of the trade-mark, brand, or name.

Section 59-1104 contains conditional escape provisions from the obligations imposed by a contract entered into pursuant to the terms of section 59-1102. Nothing further need be said here about it since neither the cause of action nor the defense thereto depends upon any of these provisions.

The text of section 59-1105 is as follows: "Willfully

and knowingly advertising, offering for sale or selling any commodity at less than the price stipulated in any contract entered into pursuant to the provisions of sections 59-1101 to 59-1108, whether the person so advertising, offering for sale or selling is or is not a party to such contract, is unfair competition and is actionable at the suit of any person damaged thereby."

The purport and effect of the two sections together in the connection of concern in this case is to say that in the event of the entry into an agreement between the owner or wholesaler of a trade-mark, brand, or name used in connection with a commodity and a retailer or reseller of such commodity agreeable to the provisions of section 59-1102, no other retailer or reseller of such commodity, whether he be a party to the agreement or not, having notice of the agreement, shall sell, advertise, or offer for sale any such commodity at less than the price stipulated in the agreement. The action is the outgrowth of claimed violations of section 59-1105 in its relation to sections 59-1102 and 59-1103.

Section 59-1106 grants a producer or wholesaler the right to refuse to sell commodities contemplated by the act to anyone refusing to enter into an agreement pursuant to the terms of section 59-1102.

The two remaining sections in the revision, they being sections 59-1107 and 59-1108, have no bearing on the controversy herein.

Prior to 1937, section 59-801, Comp. St. 1929, was a prohibitory provision embracing a criminal penalty as follows: "Every contract, combination in the form of trust or otherwise, or conspiracy in restraint of trade or commerce, within this state, is hereby declared to be illegal. Every person who shall make any such contract or engage in any such combination or conspiracy shall be deemed guilty of a misdemeanor, and, on conviction thereof, shall be punished by fine not exceeding five thousand dollars, or by imprisonment not exceeding one year, or by both."

By the amendment of 1937 contained in the act under examination, which by revision has become section 59-801, R. R. S. 1943, the matters authorized by the provisions hereinbefore referred to were excepted from the former prohibition and the former penalty. The amended section is as follows: "Except as to any contract executed pursuant to or under the authority of the provisions of the Fair Trade Act, every contract, combination in the form of trust or otherwise, or conspiracy in restraint of trade or commerce, within this state, is hereby declared to be illegal. Every person who shall make any such contract or engage in any such combination or conspiracy shall be deemed guilty of a misdemeanor, and upon conviction thereof shall be punished by a fine not exceeding five thousand dollars, or by imprisonment not exceeding one year, or by both."

By petition and amendment thereto, for its cause of action, the plaintiff alleged substantially, among other allegations not necessary to be repeated here, that it was a corporation organized under the laws of the State of Delaware with a place of business at Elgin, Illinois, known as Toastmaster Products Division; that the principal business of the Toastmaster Products Division is the manufacture and sale of Model 1-B14 Automatic Pop-up Toasters which have for many years been manufactured and sold under the trade-mark "Toastmaster"; that these toasters were in fair and open competition with toasters of the same general class; that on August 2, 1952, the plaintiff entered into a retail agreement such as is contemplated by section 59-1102 with Hardy Furniture Company of Lincoln, Nebraska, and that on August 21, 1952, it entered into a like contract with Orchard & Wilhelm Company of Omaha, Nebraska; that in these agreements the minimum reselling or retail price on "Toastmaster" was fixed at $23; that the defendant is a corporation and is operating a retail drug store in Omaha, Douglas County, Nebraska; that the defendant was duly notified of the contracts entered into between

the plaintiff and Hardy Furniture Company and Orchard & Wilhelm Company; and that after receiving notice of the agreements the defendant as a retailer advertised and offered for sale "Toastmasters" at a price less than $23, the minimum price fixed in the agreements contrary to the provisions of the Fair Trade Act and particularly to section 59-1105 thereof, and to the injury and damage of the plaintiff. In consequence of which plaintiff invoked protection through injunctive process and prayed for damages.

After the filing and disposition of a motion directed to the petition, the defendant filed a demurrer and later an amended demurrer. This amended demurrer was overruled. Thereafter an answer was filed which answer contained a renewal and reassertion of the amended demurrer. Issue was then joined by reply on the part of the plaintiff.

After issue was joined, as already indicated, a trial was had to the court which, as has also been indicated, resulted in a decree in favor of the defendant.

On the trial a considerable amount of testimony was adduced and numerous exhibits were received in evidence. A review of the details of this evidence however is not required herein. The basic facts are not in substantial dispute. The summary of the contents of plaintiff's petition which appears hereinbefore contains a fair reflection of the essential facts upon which the determination of the issues presented must depend. This, as we interpret, the defendant does not deny. The basic defense on the trial was not as to conflict on questions of fact but on the question of validity and constitutionality of the Fair Trade Act generally and particularly section 59-1105 thereof. This question was raised by the amended demurrer and preserved in the answer.

In actuality, as is indicated by the decree rendered, this approach is not different from that taken by the district court. The decree however will not be summarized or analyzed herein since, this being an equity

case, this court will consider it de novo and arrive at an independent conclusion. Lackaff v. Bogue, 158 Neb. 174, 62 N. W. 2d 889; Spencer v. Spencer, 158 Neb. 629, 64 N. W. 2d 348.

There are eight specifications of challenge of invalidity and unconstitutionality which are designated by letters from (a) to (h). These designations will be used in respect to these challenges or such of them as are necessary to be considered in making the required determinations in this case. An abbreviated but, we think, fair statement of these challenges is the following:

(a) The Fair Trade Act is violative of Article III, section 14, of the Constitution of the State of Nebraska, in that it is broader than the title.

(b) The Fair Trade Act is violative of Article III, section 14, of the Constitution of the State of Nebraska, in that it violates the provision thereof which states that no law shall be amended unless the new act contains the section as amended, and a repeal of the old section.

(c) Section 59-1105, being a part of the Fair Trade Act, is in conflict with and neither amends nor repeals section 59-801, R. R. S. 1943, which makes unlawful any combination in restraint of trade except any contract executed under authority of the Fair Trade Act, but fails to except combinations attempting to restrain trade beyond the scope or outside the parties to such contract.

(d) The Fair Trade Act constitutes an unconstitutional delegation of legislative power in violation of Article III, section 1, of the Constitution of the State of Nebraska, to fix prices of goods without conforming to any standards prescribed by the Legislature.

(e) The Fair Trade Act is violative of Article I, section 16, of the Constitution of the State of Nebraska, in that it grants to manufacturers the right to fix the retail prices of articles manufactured by them.

(f) Section 59-1105 is in conflict with and repugnant to section 59-1107.

(g) The Fair Trade Act has the effect of depriving of

liberty and property without due process of law, and constitutes legislation beyond the scope of the police power contrary to Article I, section 3, of the Constitution of the State of Nebraska, and section 1 of the Fourteenth Amendment of the Constitution of the United States of America.

(h) The Fair Trade Act is invalid and unconstitutional because at the time enacted it was contrary to and inconsistent with the Act of Congress of the United States known as the Sherman Anti-Trust Act (26 St. 209, c. 647, 15 U. S. C. A., § 1) and was therefore repugnant to Article VI of the Constitution of the United States which provides that the Constitution and laws of the United States shall be the supreme law of the land, and to Article I, section 8, of the Constitution of the United States, and that since it was invalid at the time of enactment it continues to so be invalid.

Specifications (g) and (h) will be considered first. These two challenge the Fair Trade Act on the ground of unconstitutionality under the Constitution of the United States. In (g) it is charged that the act deprives of property without due process of law and constitutes legislation beyond the scope of the police power and that it bears no relation to public morals, health, safety, or the general welfare and thus is repugnant to section 1 of the Fourteenth Amendment of the Constitution.

This specification must be resolved in favor of plaintiff and against the defendant. This particular act has not previously been before the Supreme Court of the United States but its substance in this respect has been before that court in proceedings arising out of similar legislation enacted by the legislatures of other states. Two such notable cases are Old Dearborn Co. v. Seagram Corp. and McNeil v. Joseph Triner Corp., 299 U. S. 183, 57 S. Ct. 139, 81 L. Ed. 109, 106 A. L. R. 1476. These cases came to the United States Supreme Court from the Supreme Court of Illinois where validity and constitutionality of an act similar in all material re-

spects to the one under consideration here was sustained. The two cases were decided by the United States Supreme Court in a single opinion. For the further purposes of this opinion these cases will be referred to as the Old Dearborn case.

The United States Supreme Court did not hold that the act of Illinois was violative of the United States Constitution. In its observations however it pointed out that such legislation had been held to amount to legislation authorizing unlawful restraint of trade, which was violative of common law, and so far as interstate commerce was affected it was invalid under the Sherman Anti-Trust Act of July 2, 1890 (26 St. 209, c. 647, 15 U. S. C. A., § 1). See Dr. Miles Med. Co. v. John D. Park & Sons Co., 220 U. S. 373, 31 S. Ct. 376, 55 L. Ed. 502.

The effect of this was not to say that such state legislation was unconstitutional but that it was invalid for the reason that it was in conflict with holdings based upon the prohibitions of common law and of United States statutes.

In this light it must be said that the Fair Trade Act is not violative of the Constitution of the United States as contended in specification (g).

Specification (h) is for the most part answered in favor of the appellant by what has been said with regard to (g). In the Old Dearborn case it was pointed out substantially that though such state legislation as this was violative of the Sherman Anti-Trust Act it was not violative of the Constitution of the United States because thereof.

One phase of specification (g) and the other specifications relate to constitutionality of the act within the meaning of the Constitution and laws of the State of Nebraska. These, or such of them as appear to be necessary to be considered in the determination of the issues involved, will be hereinafter discussed.

Basically the pleaded cause of action seeks to sustain the validity of section 59-1105 of the act. The attack

of the defendant responds to the contention of the plaintiff but it also challenges the constitutionality of the act as to other features as well. It appears appropriate to consider first the basic issue. This basic issue is presented by specifications (c), (d), (e), and (g).

Section 59-1102 of the act generally permits contracts for resale of commodities which bear the trade-mark, brand, or name of the producer or wholesaler of such commodities and which are in free and open competition with commodities of the same general class produced or distributed by others, which require that the buyer will not sell the commodities at less than the minimum price stipulated by the seller; also it permits contracts requiring buyers, on resale, to exact of buyers from them to resell at the minimum price established by the original seller; it also permits contracts that a buyer (buyer from the producer or subsequent wholesaler) will not sell to a wholesaler unless the wholesaler shall in turn agree with a retailer that he will sell to consumers for use at not less than the minimum stipulated price; and repetitiously it permits contracts with retailers that they will not sell below the stipulated minimum price. There are exceptions to these provisions in section 59-1104 but they require no further mention.

The constitutionality of the provisions of these two sections as to subject matter is not brought into question. The attack upon them relates for the most part to formal requirements essential in the promulgation of constitutionally valid legislation. This subject will receive consideration later in this opinion.

The substance of section 59-1105, in a paraphrase, is that when a contract has been entered into in conformity with section 59-1102, subject to the exceptions of section 59-1104, no person, whether he be a party to any such contract or not, shall willfully and knowingly advertise, offer for sale, or sell any such commodity at less than the price stipulated in such contract, and that

action will lie against any such person by any person damaged thereby.

It clearly appears from the record herein that the plaintiff was the producer of a commodity such as was the subject of the resale provision of the act and that the defendant, contrary to the rights of the plaintiff declared by the act, and in violation of section 59-1105, did advertise, offer for sale, and sell such commodities at a price lower than stipulated in contracts for the sale of such commodity. The defendant had not entered into a contract such as is contemplated by the act but came within the purview of a reseller at retail having knowledge of a contract or contracts with others. This not only clearly appears but it is admitted by the defendant.

It follows of course that ascertainment of the prevailing party must, at least in part, depend upon the constitutionality of section 59-1105 in its relation to the other parts of the act.

Specifications (c), (d), (e), and (g) in varying terms all challenge the constitutional power of the Legislature to impose the duty upon resellers or retailers of commodities coming within the purview of the act but who have not contracted pursuant to the terms of the act to conform to contracts entered into by others.

Specification (c) will not be discussed beyond saying that it relates for the most part to legislative procedure in the enactment and amendment of statutes.

Specification (d) in the main charges an unconstitutional delegation of legislative power contrary to Article III, section 1, of the Constitution. Particularly it challenges the power of the Legislature to allow the fixing of prices by private parties without also providing legislatively a standard therefor.

This question is of incidental concern but we do not think it of controlling importance on the issue being considered at this point, that is the right to require the adherence by third parties pursuant to section 59-1105 to contracts entered into conformable to the provisions of

section 59-1102. The question here is not of price fixing, contracts as between producer and retailer either with or without prescription of standards, but the validity and effect of the extension and imposition of obligations between contracting parties to persons who are not parties to such contracts. The validity of contracts such as are contemplated by section 59-1102 have been upheld.

Specifications (e) and (g) considered in the light of their language and the presentations made in the briefs point up and bring into focus the issue as to section 59-1105 in its relationship with section 59-1102 and the controlling Nebraska constitutional principles.

Specification (e) charges in substance that the act is unconstitutional and violative of Article I, section 16, of the Constitution of the State of Nebraska in that it grants manufacturers the right to fix the retail prices of articles manufactured by them. By what has already been said we have eliminated from consideration as controlling the phase of this charge dealing with fixation under section 59-1102, and direct attention only to that phase which relates to fixation of retail prices of retailers not coming under section 59-1102 but under section 59-1105.

The point of constitutional attack under this specification is that section 59-1105 impairs the obligation of contracts and makes an irrevocable grant of special privileges or immunities.

Specification (g) charges that the act is unconstitutional and in violation of Article I, section 3, of the Constitution of the State of Nebraska, in that it has the effect of depriving of liberty and property without due process of law; and also that it is legislation beyond the police power of the state.

The point that the act has the effect of impairing the obligation of contracts has not been supported by legal proposition by the party advancing it, therefore it will not be considered further herein except to say that on

its face it appears that here we are not dealing in the true sense with impairment of contracts but with impairment of the right to contract, the essence of which inheres in another point of attack made by the defendant.

Whether or not legislation contains a grant of special privilege or immunity is not fully ascertainable from definition or declarative language of the legislation but in addition, reference and resort must be had to what in practice it is designed to and does accomplish.

The over-all purpose and design of this act is not defined or declared in the act itself. The declared purpose and design appears alone in the title to L.B. 131, Laws 1937, chapter 136, page 478. It has been previously quoted herein.

It is to be observed from this title that the purpose of the act is to protect trade-mark owners, producers, wholesalers, and the general public against injurious practices in the distribution of designated commodities. It is to be further observed that this purpose is to be accomplished through the medium of voluntary contracts establishing minimum resale prices.

It becomes clear from this that nothing in either the act or its title is definitive or declarative on the question of whether or not section 59-1105 in its relation to section 59-1102 has the effect of special privilege or immunity. Resort, therefore, for that purpose must be had to what it is apparent that this part of the act by its terms is designed to accomplish and may be reasonably regarded as permissible.

In this light the conclusion is inescapable that trade-mark owners, producers, and wholesalers may by the simple device of attaching to their commodities a distinguishing brand or mark and entering into a contract with a single retailer establish and maintain on a horizontal level for all retailers a minimum retail price.

It becomes appropriate to ask wherein in this is there a grant of special privilege or immunity?

In answer it is pointed out, and on this point the

parties do not disagree, that any combination of retailers themselves to effect a minimum price for the sale of merchandise or commodities to the public at retail would be illegal and void. Also the cases cited herein upholding the constitutionality of acts such as this and those denying constitutionality point this out.

An effect of this legislation is to permit one producer and one retailer to do on behalf of a class of retailers that which legally the members of the class are forbidden to do on their own behalf.

It compels retailers to the observance of the terms of an agreement to which they have never given assent.

It permits the impairment and destruction of the right of a retailer, who has purchased commodities in good faith and without restriction on the right of resale at the time of purchase, to freely sell such commodities to his customers.

It immunizes against competition between and among retail competitors handling such commodities in trade.

These aspects of grant are limited, as is clear, only to contracting parties under section 59-1102. To all others engaged in trade and commerce as producers, wholesalers, distributors, and retailers the grants and privileges of the act are denied.

The conclusion in this connection is that as to this phase of the act it is unconstitutional for the reason that within the meaning of the constitutional prohibition it grants special privilege and immunity. Decisions sustaining this viewpoint will not be reviewed but only cited. They follow: Nelsen v. Tilley, 137 Neb. 327, 289 N. W. 388, 126 A. L. R. 729; Liquor Store, Inc. v. Continental Distilling Corp. (Fla.), 40 So. 2d 371.

As to specification (g), as pointed out, the attack is on the ground that section 59-1105 as related to section 59-1102 has the effect of depriving of liberty and property without due process of law.

Liberty within the constitutional meaning includes absence of arbitrary and unreasonable restraint upon a

person in the conduct of his business and the handling of his property. See, State ex rel. English v. Ruback, 135 Neb. 335, 281 N. W. 607; Nelsen v. Tilley, *supra;* Chicago, B. & Q. R. R. Co. v. McGuire, 219 U. S. 549, 31 S. Ct. 259, 55 L. Ed. 328.

It can hardly be questioned that this phase of the act within the constitutional meaning and within these concepts has the effect of permitting deprivation of liberty and property without due process of law. The most outstanding feature is, as has already been made clear, that retailers through legislative authority but without legislative standards for fixing prices are placed uncontrollably and solely in the hands of a producer and one retailer as to the minimum price at which they may sell the particular type of merchandise to which the contract between the two relates.

The plaintiff seeks to defend the act on numerous bases. One is that the power granted under section 59-1105 is one in the public interest and as such is constitutional.

On its face the act is a price-fixing act, not, it is true, one wherein the Legislature itself has assumed to fix prices, but one wherein it delegates to the extent and under conditions named that power without restriction or reservation to private parties.

This court has said that in the absence of appearance of public interest the Legislature may not itself impose prices. Boomer v. Olsen, 143 Neb. 579, 10 N. W. 2d 507. May it constitutionally confer upon others a right which it does not itself possess?

The plaintiff urges that the Legislature does have this right in this instance and for the reason that the act is in the public interest and does not run afoul of constitutional inhibition.

In primary essence the contention is that it is in the public interest that specified producers of merchandise which is in open competition with other merchandise of the same class shall have the right to fix the terms upon which such merchandise shall move to the ultimate

consumer and to compel all others to respect those terms.

This contention has been effectually sustained by courts of several states. See, Max Factor & Co. v. Kunsman, 5 Cal. 2d 446, 55 P. 2d 177, 299 U. S. 198, 57 S. Ct. 147, 81 L. Ed. 122; Burroughs Wellcome & Co. v. Johnson Wholesale Perfume Co., 128 Conn. 596, 24 A. 2d 841; Seagram Corp. v. Old Dearborn Co., 363 Ill. 610, 2 N. E. 2d 940, 299 U. S. 183, 57 S. Ct. 139, 81 L. Ed. 109; Barron Motor v. May's Drug Stores, 227 Iowa 1344, 291 N. W. 152; Pepsodent Co. v. Krauss Co., Ltd., 200 La. 959, 9 So. 2d 303; Goldsmith v. Mead Johnson & Co., 176 Md. 682, 7 A. 2d 176; Johnson & Johnson v. Weissbard, 121 N. J. Eq. 585, 191 A. 873; Bourjois Sales Corp. v. Dorfman, 273 N. Y. 167, 7 N. E. 2d 30, 110 A. L. R. 1411; Lilly & Co. v. Saunders, 216 N. C. 163, 4 S. E. 2d 528, 125 A. L. R. 1308; The Borden Co. v. Schreder, 182 Or. 34, 185 P. 2d 581; Miles Lab., Inc. v. Owl Drug Co., 67 S. D. 523, 295 N. W. 292; Frankfort Distillers Corp. v. Liberto, 190 Tenn. 478, 230 S. W. 2d 971; Sears v. Western Thrift Stores, 10 Wash. 2d 372, 116 P. 2d 756; Weco Products Co. v. Reed Drug Co., 225 Wis. 474, 274 N. W. 426; Burche Co. v. General Electric Co., Court of Common Pleas, Dauphin County, Pennsylvania (not yet officially reported).

The opposite view has been taken by courts of equal standing in other states. Bristol-Myers Co. v. Webb's Cut-Rate Drug Co., Inc., 137 Fla. 508, 188 So. 91; Grayson-Robinson Stores v. Oneida Ltd., 209 Ga. 613, 75 S. E. 2d 161; Cox v. General Electric Co., — Ga. —, 85 S. E. 2d 514; Shakespeare Co. v. Lippman's Tool Shop Sporting Goods Co., 334 Mich. 109, 54 N. W. 2d 268; Union Carbide & Carbon Corp. v. White River Distributors, Inc., — Ark. —, 275 S. W. 2d 455. To these may be added the State of Utah wherein the matter has been passed upon by the nisi prius court but not the court of last resort.

In addition to a consideration of this subject these two groups of cited cases collectively present in great detail

the pro and con of all the questions presented by the appeal herein.

It is urged that the United States Supreme Court in the Old Dearborn case sustained the contention of plaintiff. We do not think that when the matter receives the proper legal approach that it may be said that it has done so in that or in any other case.

It is true that in the opinion there the court did arguendo in strong language indicate a conviction that such state legislation was constitutional. This however was not the issue decided by the United States Supreme Court.

The issue decided there was that of whether or not the constitutionality of such legislation was a matter for determination by the state through its legislature and its courts or by the United States Supreme Court. It held that this was a question for determination by and within the state, and in clear terms accepted the determination by the state on that basis.

In subsequent litigation in other cases involving the same question, some of which have been decided one way and some the other, parties have sought unsuccessfully to have review of this subject by the United States Supreme Court. We think it is reasonably inferable from this that that court is still satisfied with its decision that the constitutionality of statutes containing the substance of the one under consideration here is a matter for decision by the courts of the particular states in and for the states.

It is not possible to draw from the act an indication of recognizable public interest to be served by the power which flows from section 59-1105. It is likewise impossible to draw any such indication from the title to the act.

The question of whether or not legislation is in the public interest is ordinarily one for legislative determination, however it may not under the guise of regulation in the public interest impose conditions which are on their face unreasonable, arbitrary, discrimina-

tory, or confiscatory. See, Petersen Baking Co. v. City of Fremont, 119 Neb. 212, 228 N. W. 256; Nelsen v. Tilley, *supra*; Boomer v. Olsen, *supra*.

For the most part the public interest for which the plaintiff contends, if it may be regarded as such, appears in the evidence of plaintiff as to the motivation of interested parties in presenting the proposal of this legislation to the Legislature of Nebraska and other legislative bodies and the motivation of the Legislature of Nebraska and other legislatures in its adoption.

It is trite to say that motive alone may not be accepted as a criterion for the determination of the constitutionality of legislative action.

The motive or purpose is referred to at great length in the briefs. In great detail it is said that it is to protect the producer and give him a fair price in the disposition and distribution of his commodity, and to protect the retailer in his disposition thereof.

This motive or purpose of the legislation as described in the evidence and briefs may by contracting parties be attached to such legislation, but it in nowise flows nor is it required to flow from that which is empowered by the legislation.

This motive or purpose of the Legislature does not become a sanction to action in conformity therewith by contracting parties under section 59-1102. There are no standards or requirements whereby contracting parties are obligated to conform to the claimed motivations or alleged purposes of the legislation.

The motive which induced the legislation does not and cannot become a check upon the power which is conferred by and inheres in the specific terms of the act.

Without any regard to these extraneously declared motives or purposes or any provision of the act, contracting parties may at will, with or without reason, arbitrarily, uncontrollably, or even capriciously by mere fiat and notice apply the provisions of section 59-1105.

We are unable to find an escape from the conclusion

that such a grant of power is unconstitutional and therefore void.

The conclusions arrived at up to this point fully dispose of the issue tendered by plaintiff in its pleaded cause of action.

Other points as to constitutionality of the act as a whole and as to certain elements of the act, as has been pointed out, have been presented and therefore we think, for reasons which will appear, one of them should be answered herein.

By specification (a) it is asserted that the act is broader than its title and because thereof Article III, section 14, of the Constitution of the State of Nebraska, has been violated. The point particularly made is that the subject matter contained in section 59-1105 finds no proper designation or suggestion in the title.

If this is found to be true then of course this provision was unconstitutional at the time of passage of the act under the specific terms of the constitutional language.

This appears to be true. It is to be observed that the title to the act refers to fixation of minimum prices "through the use of voluntary contracts." It does not in anywise express or carry a suggestion of a purpose to subject third parties to such contracts. Other reasons for this conclusion need not be discussed.

If the section, being unconstitutional, was an inducement to the passage of the act in its entirety, the act was unconstitutional. Moeller, McPherrin & Judd v. Smith, 127 Neb. 424, 255 N. W. 551.

There can be no doubt that section 59-1105 was an inducement to the passage of the act in its entirety. The plaintiff at least tacitly admits that this is true. The cause of action pleaded is made to depend on this premise. We therefore do not deem it necessary to cite authorities to sustain this viewpoint.

It becomes necessary to say that agreeable to the con-

tention contained in specification (a) the act at the time of passage was unconstitutional.

The plaintiff says substantially however that even if the act was unconstitutional for these reasons at the time of passage, it may not be said that this is true at the present time.

The basis of this contention is that the act was adopted with its title in 1937 and thereafter in 1943 the act without the title was duly and regularly carried into the regularly authorized revision of the Nebraska statutes which fact, the plaintiff says, bars the right to consider or make reference to the title in the present determination of the constitutionality of the act.

This question has been considered in other jurisdictions. By the weight of authority it has been held that when a legislative act has been carried into an authorized revision or codification which revision or codification has been duly and regularly adopted by the Legislature, an objection that it is unconstitutional on the ground that the act is broader than the title is not available.

The rule is stated in 82 C. J. S., Statutes, § 215, p. 356, as follows: "A constitutional provision that no bill shall embrace more than one subject which shall be expressed in the title is not violated by a legislative act adopting a codification or revision of statutes under some comprehensive title, * * *." See, also, Widney v. Hess, 242 Iowa 342, 45 N. W. 2d 233; Fidelity & Columbia Trust Co. v. Meek, 294 Ky. 122, 171 S. W. 2d 41; State v. Pete, 206 La. 1078, 20 So. 2d 368; Duke Power Co. v. Sommerset Co. Bd. of Taxation, 125 N. J. Law 431, 15 A. 2d 460; State v. Czarnicki, 124 N. J. Law 43, 10 A. 2d 461; Commonwealth v. Evans, 156 Pa. Super. 321, 40 A. 2d 137; Marston v. Humes, 3 Wash. 267, 28 P. 520; Johnson v. Harrison, 47 Minn. 575, 50 N. W. 923, 28 Am. S. R. 382; McLane v. Paschal, 8 Tex. Civ. App. 398, 28 S. W. 711; The State v. Brassfield, 81 Mo. 151, 51 Am. R. 234.

A further expression of the rule appears in 82 C. J. S., Statutes, § 274, p. 459, as follows:

"Although an act, as originally passed, was unconstitutional because it contained matter different from that expressed in its title, or referred to more than one subject, it becomes, if otherwise constitutional, valid law on its adoption by the legislature and incorporation into a general revision or code, without reference to its title as originally enacted; * * *." See, also, Dillon v. Hamilton, 230 Ala. 310, 160 So. 708; Banks v. Peek, 249 Ala. 32, 29 So. 2d 418; Reagan v. Fentress County, 169 Tenn. 103, 83 S. W. 2d 244; Teem v. State, 79 Tex. Cr. 285, 183 S. W. 1144; State v. Pitet, 69 Wyo. 478, 243 P. 2d 177.

It is true that this act was carried into the 1943 revision which was duly authorized and thereafter regularly and duly adopted, and on the authority of the rule cited attack upon the title as such of the act as originally adopted is not available herein.

While this point is decided in favor of the plaintiff it avails nothing in favor of the constitutionality of the act as a whole.

As has been pointed out the act was invalid before inclusion in the revision for the reason that it was induced by the unconstitutional section 59-1105. Obviously for the same reasons that section 59-1105 was unconstitutional before incorporation in the revision it was unconstitutional thereafter. This conclusion appears to flow from the following from 82 C. J. S., Statutes, § 274, p. 458, as follows:

"Where a statute, as originally enacted, was unconstitutional as to content, or was void because, under the constitution, the legislature was without power to pass it, it ordinarily will not be validated by adoption and incorporation into a code or revision. For obvious reasons, an invalid statute does not become valid by being placed in a code which has no legislative sanction; * * *." See, also, Butler v. Guaranty Savings & Loan

Assn., 247 Ala. 4, 22 So. 2d 328; State v. Lee, 156 Fla. 291, 22 So. 2d 804; Fidelity & Columbia Trust Co. v. Meek, *supra;* State ex rel. Miller v. O'Malley, 342 Mo. 641, 117 S. W. 2d 319; Ridgill v. Clarendon County, 188 S. C. 460, 199 S. E. 683.

We hold therefore that the entire Fair Trade Act (Laws 1937, c. 136, p. 478) as well as section 59-1105, R. R. S. 1943, thereof (Laws 1937, c. 136, § 5, p. 480), are unconstitutional and void and that the decree of the district court should be and it is affirmed.

AFFIRMED.

OSMAN INGRAHAM, APPELLANT, V. FRANK HUNT ET AL., APPELLEES.

68 N. W. 2d 344

Filed February 11, 1955. No. 33601.

1. **Deeds: Reformation of Instruments.** A deed to real estate, if it is a conveyance not voluntary, like any other written contract, may be impeached by either party thereto for fraud or mistake, and parol testimony is competent to reform it so as to make it recite the actual agreement between the parties.
2. **Deeds.** However, upon the execution, delivery, and acceptance of an unambiguous deed, such being the final acts of the parties expressing the terms of their agreement with reference to the subject matter, all prior negotiations and agreements are deemed merged therein, in the absence of a preponderance of evidence clear and convincing in character establishing some recognized exception such as fraud or mistake of fact, and the deed will be held to truly express the intentions of the parties.

APPEAL from the district court for Hitchcock County: VICTOR WESTERMARK, JUDGE. *Reversed and remanded with directions.*

Jack H. Hendrix and *Russell & Colfer,* for appellant.

Carlyn G. Wolfe and *Hines & Hines,* for appellees.

Heard before SIMMONS, C. J., CARTER, MESSMORE, YEAGER, CHAPPELL, WENKE, and BOSLAUGH, JJ.

CHAPPELL, J.

Plaintiff, Osman Ingraham, brought this action seeking to quiet his title and right to possession of described lands, together with equitable relief, as against defendants Frank Hunt, Faith B. Hunt, John S. Burks, and Clara E. Burks. Defendants Hunt filed an answer and cross-petition denying generally and seeking to have the title to described lands quieted in them, together with injunctive relief as against plaintiff. Defendants Burks, who were tenants of the Hunts, answered, denying generally. Subsequently the issues were completed by plaintiff's replies and answer to defendants' cross-petition.

After a pre-trial hearing, the cause was tried upon the merits and a judgment was rendered, finding and adjudging the issues generally against plaintiff on his petition and in favor of defendants Hunt on their cross-petition. Plaintiff's motion for new trial was overruled and he appealed, assigning substantially that the judgment was not sustained by the evidence but was contrary thereto and contrary to law. Upon trial de novo under elementary rules with relation thereto, we sustain the assignment.

The record discloses that prior to February 25, 1943, plaintiff was the owner of farm lands which for clarity and brevity will be called tract No. 1 and tract No. 2. Tract No. 1 is the south half of Section 20, and Lots 1, 2, 3, and 4, in Section 29, all in Township 2 North, Range 35 West of the 6th P. M., in Hitchcock County. Tract No. 2 is the north half of the southeast quarter and the northeast quarter of the southwest quarter, and Lots 5, 6, 7, and 8, all located in Section 29, Township 2 North, Range 35 West of the 6th P. M., in Hitchcock County.

The original government survey made in 1872 established the Republican River as the boundary between the two tracts. Tract No. 1 was on the north side with Lots 1, 2, 3, and 4 thereof adjacent to the river. Tract No. 2 was on the south side, with Lots 5, 6, 7, and 8 ad-

jacent to the river. At the time of the transaction here involved, which was initiated and concluded entirely by correspondence, plaintiff lived in San Bernardino, California, and defendants Hunt, who inferred that they were ignorant of legal transactions and proceedings, lived in Bremerton, Washington. However, defendant Frank Hunt formerly lived near the land involved and admittedly had been familiar with it for about 50 years.

The evidence relating to the transaction was not in dispute. William C. Dahnke, a licensed real estate broker for many years, lived in Stratton, Nebraska. He was plaintiff's agent, having power of attorney to manage his real estate in Hitchcock County. While acting in such capacity he corresponded at length with defendant Frank Hunt, with whom he was well acquainted, and received replies thereto. Only such parts of that correspondence as we deem important and controlling will be recited herein.

In that connection, on February 11, 1943, Dahnke wrote an airmail letter to defendant Frank Hunt saying: "In a letter from the Ingrahams this morning they advise that they will sell their land (the old Wolfe Ranch) south of the river for $2000.00, * * *. And of course it is understood that this is to be a cash consideration.

"Before I can proceed very far in this matter if (sic) will be necessary that I hear from you, and in case you report favorably, it must be understood that it may take some little time to work this out for it will undoubtedly take considerable correspondence and time since they live in California and you in Washington. * * *

"This land has an oil and mineral lease on it and it is their desire to retain a one half interest in any future royalties that may accrue."

On February 13, 1943, defendant Frank Hunt answered by airmail saying: "Received your letter in regard to the land known as the Wolfe place I could use that south of the river but not at more than $1500. cash I would want the oil lease rent, of 10 cents an acre, but

would give them ½ of oil royalties for the next five years, in case oil is found, but would want it on a contract, not on the deed. *Allso (sic) I would want the land measured to center of river bed and that line to stand which ever way the river changed, because it could go back north very nearly to their north line or could come south where it cut though (sic) dureing (sic) the flood, so that line as it stand now would be fair to both partyes.* (sic) Now if they want to sell for $1500. cash I would be willing to post a $500. check with the Stratton Bank, to make them safe to go ahead and buy other land, but we want to hurry along as I am trying to deal for other land. * * * Hopeing (sic) we can deal on this land I wish to remain * * *." (Italics supplied.)

On February 17, 1943, Dahnke replied, saying: "Your letter of February 13, 1943 duly received relative to the purchase of the Ingraham land south the river west of Stratton, Nebraska, and I have been working fast since time is relatively short, and both parties now apparently in a hurry to know just where they are at in this matter. So we will try to make a deal and to get it closed, if at all possible, by March 1, 1943.

"To try to expedite matters I am doing something unusual and something that I have never done before in my numerous years of business. I have drawn a contract before the terms and consideration have been agreed upon, and which I now submit herewith subject to your approval, and for your signature and the wittnessing (sic) of same if approved. This to include your wife too if she is to be a party in the deal. In that case her name to be inserted.

"Your offer on the land was not accepted but this tendered agreement in (sic) a compromise, so to speak, between what the Ingrahams asked and your offer. It seems to me that this is fair to both parties but now it is entirely up to you to decide. * * *

"The deed and descriptions will be in accordance to the Abstract of Title covering this land and the Govern-

ment Survey thereon, and to indicate this to you I have drawn a copy of a Plat showing the Government Survey and the acreage. Think you will find this self-explanatory and satisfactory. In other words they will deed just what they received as the Abstract of Title discloses. The river itself of course belongs to the Government and the tracts adjoining it are surveyed and laid out in lots. On the drawing I have shown the number and acerage (sic) in each lot. The total acerage (sic) amounts to 245.8 acres. * * * I have authority to sign for the Ingrahams or if you want it I can have them sign the contracts personally. But of course first it is for you to approve. Then execute if you do approve." The enclosed hand-drawn plat correctly portrayed the approximate location of the river and plaintiff's land on both sides thereof according to the government survey of 1872. It recited specifically that there were 54.6 acres in Lot 5, 21 acres in Lot 6, 22.4 acres in Lot 7, 27.8 acres in Lot 8, together with 80 acres in the north half of the southeast quarter and 40 acres in the northeast quarter of the southwest quarter, or a total of 245.8 acres in tract No. 2 as heretofore described. Further, the enclosed agreement for sale and purchase thereof, dated February 17, 1943, and made in duplicate, contained the name of Faith B. Hunt written in by defendants as suggested in Dahnke's letter, and specifically described the land as: "The North Half of the southest (sic) Quarter; the Northeast Quarter of the Southwest Quarter; Lots 5, 6, 7, and 8, (Containing 246 acres, more or less, according to Gov. survey) of Section 29, Town 2 N., Range 35 West, in Hitchcock County, Nebraska." It recited the consideration to be paid therefor by defendants as $1,750, to be paid $500 in cash and $1,250 on or before March 1, 1943, or as soon thereafter as warranty deed and merchantable abstract of title could be furnished. As suggested by defendants, the Commercial Bank of Stratton was designated therein to act as escrow agent

and depository through which the agreement was to be closed.

Defendants Hunt signed the agreements, and on February 20, 1943, defendants Hunt wrote Dahnke airmail saying: "Am returning contracts with a five hundred $ check. I want this under stood that seventeen hundred and fifty dollars is all the money that this land is going to cost us. In making this deed, have it made to a joint deed to both of us. The land to go to the surviver (sic). If in case this deal falls thru with I expect you to return our check. Also five years on the oil royalty."

The agreement aforesaid was signed by Dahnke as agent for plaintiff and his wife, and on February 23, 1943, Dahnke wrote to defendant Frank Hunt saying: "Herewith inclosed your copy of the Real Estate Sale agreement which was duly received from you and your wife together with your $500.00 check as down payment on the contract.

"Joint Tenancy warranty deed, with title to go to survivor, was drawn yesterday and sent on its way to California for execution and abstracts of title sent to Trenton for continuation and certification down to date. Will you want these sent to you for examination and inspection or do you desire some one out here to attend to this for you. I should get them back from Trenton within a day or two.

"The separate contract which you asked covering the payment of one half any accrueing (sic) Oil and Gas royalties for a period of one year in (sic) also enclosed herewith. I have also signed the agreement in duplicate for the Ingrahams and if it is approved and satisfactory with you, you and your wife kindly sign same, and have your signatures wittnessed (sic) at least by one person. On second thought I beleive (sic) you should really have your signatures acknowledged before a Notary Public since you are the principals in this agreement, and it may really turn out to be a very valuable document within the 5 year period. You know there

is a possibility of drilling for oil out that way some time within the near future. So please have it notarized and oblige. Let us do this all in a business way. That is the way all your papers will come to you. The original copy is for the Ingrahams and you may retain the Duplicate for your files. * * *

"The deed will be placed in Escrow in the Commercial Bank when it is returned here and you will be promptly advised of same so that you can send your final payment there and we can make the exchange of papers thru the bank. But advise me about the abstract of title."

The enclosed 5-year supplemental oil royalty agreement, dated February 22, 1943, which agreement specifically described the land as heretofore set forth in the other agreement, was duly signed and acknowledged by defendants Hunt on February 25, 1943, who kept the duplicate thereof and returned the original to Dahnke.

Again, on March 1, 1943, Dahnke wrote defendant Frank Hunt saying: "The Oil Royalty agreement rereceived from you yesterday; also the executed deed from California. Even though you have not made the final payment on the contract in the amount of $1250.00 I am sending the deed herewith for your inspection. I called the bank and they reported that you had not yet made arrangements for this payment but I am going to trust you as you are willing and have been trusting me. * * *

"Yes, You get possession of this pasture as of March 1st, which is today, and which is in conformity with the sale agreement. * * *

"As a token I am sending you a pocket map of Hitchcock county and am sure you will enjoy it, and feel that it will be of some value to you. This map was made up by an oil company some four years or so ago and shows the current of the river as it was then. After the flood the channel had changed in many places and now it is again about back to where it was before the flood and in or near the old channel. * * * I have marked in

red as near as I can determine about where the main channel now runs."

The enclosed warranty deed had been duly executed by plaintiff and his wife on February 25, 1943, and it also specifically described the property sold to defendants as: "The North Half of the Southeast Quarter (N½ SE¼); The Northeast Quarter of the Southwest Quarter (NE¼ SW¼); and Lots 5, 6, 7, and 8; all located in Section Twenty Nine (29), Township Two (2), North, Range Thirty five (35), West of the Sixth Principal Meredian (sic), and containing 246 acres, more or less, according to the Government Survey Thereof." The enclosed pocket map also correctly traced with a red pencil the approximate course of the Republican River during February 1943. Further, defendants received the abstracts of title from Dahnke a week or two after the transaction was completed.

The record discloses that there was little if any change in the channel of the Republican River from the time of the government survey in 1872 until 1935 when a flood suddenly, violently, and visibly, by avulsion, changed its channel some distance toward the north. However, beginning about 1937, its channel began to move back toward the south, until in February 1943, it was at or near the original channel, as represented to defendants Hunt. Then from about 1945 and during the next few years, there were several flash floods which again suddenly, violently, and visibly by avulsion moved the channel of the river far toward the north of the original channel beyond Lots 2, 3, and 4 in Section 29 and into a part of Section 20, until in 1952 some 153.58 acres were left between the new and the old river channel. In 1951 an attempt was made by plaintiff's agent and other interested parties to stop such movement of the river toward the north but defendants Hunt then objected and a dispute arose over the ownership of such land which prompted plaintiff's action herein. It is the title to such 153.58 acres which defendants Hunt claimed

to own and have the right to a decree quieting title in them with injunctive and other equitable relief. In that regard, their theory primarily was that the north boundary of the land conveyed to them in February 1943 was the center of the river in its course after the 1935 flood which allegedly remained in the same location thereafter. They alleged plaintiff's agent inequitably concealed the facts from them and made misrepresentations upon which they relied.

The trial court's judgment in effect sustained that contention and reformed defendants' deed to include not only all of the land as specifically described in defendants' several contracts and warranty deed but also to include in addition "Lots 2, 3 and 4 of Section 29, Township 2, North Range 35; and that part of the South Half of Section 20, Township 2, North Range 35, West of the 6th P. M. lying south of the Republican River as the same now exists." The judgment of the court thus quieted title in defendants Hunt, giving them some 399.38 acres of land instead of 245.8 as originally provided in their agreements and deed.

We decide that the evidence and law will not sustain the trial court's judgment upon any theory. Rather, it is contrary to both. The clear and unequivocal evidence adduced by plaintiff with regard to location of the river channel in February 1943 was in fact corroborated by defendant John S. Burks, a tenant of the land deeded by plaintiff to defendants Hunt. He had been such tenant since March 1, 1943. He had also lived on an adjoining farm 18 years and within a couple of miles of it the last 35 years. In speaking of the river channel, he testified that after the 1935 flood and along in the early 1940s, the channel actually moved back south until "It was about where it was before '35." He was then asked: "Q- The river, of course, meandered, and in some places it might have been near the old channel, and in some places a little ways from it? A- It could be, yes. Q- You have no independent recollection of

where it ran in '43 when you took it over, that is when you took over this land and rented it? A- Yes, I know about where it was. * * * Q- Now, this changing you mentioned, or cutting the river banks, that was after you had flash floods after you went on this land in '43? A- Yes. Q- The river commenced to take a course to the north and cut in considerably? A- The west went north, and the east end went south. Q- And the channel was changed, was it not, by this caving-in process, when you had the flash floods, that condition has been continuous since you went on the place, has it not? A- Yes."

We conclude there was no competent evidence that plaintiff's agent inequitably concealed anything from defendants Hunt or that he made any misrepresentations to them or that there was any actual or constructive fraud or mistake since defendants Hunt received exactly what they purchased and what they wanted as demonstrated by their letter of February 13, 1943, to Dahnke, and their executed agreements and deed. Defendants did not either plead, prove, or rely upon accretion. On the contrary, plaintiff established avulsion without dispute, and as a matter of course avulsion could not change their boundary line. Iowa Railroad Land Co. v. Coulthard, 96 Neb. 607, 148 N. W. 328; Mercurio v. Duncan, 131 Neb. 767, 269 N. W. 901; Conkey v. Knudsen, 141 Neb. 517, 4 N. W. 2d 290, vacated on factual grounds in 143 Neb. 5, 8 N. W. 2d 538.

In Beckius v. Hahn, 114 Neb. 371, 207 N. W. 515, 44 A. L. R. 73, quoted with approval in Kear v. Hausmann, 152 Neb. 512, 41 N. W. 2d 850, it is said: "In equity, the reformation of an instrument has the effect of making it express the real intent of the parties. The rights of the parties are measured by the instrument as originally intended, and the effect of the reformation, as a whole, should be to give all the parties all the rights to which they are equitably entitled under the instrument which they intended to execute."

In Oft v. Ohrt, 128 Neb. 848, 260 N. W. 571, this court held: "A deed to real estate, if it is a conveyance not voluntary, like any other written contract, may be impeached by either party thereto for fraud or mistake, and parol testimony is competent to reform it so as to make it recite the actual agreement between the parties." See, also, Shurtleff v. Pick & Co., 103 Neb. 414, 172 N. W. 46, where we held that: "Equity has jurisdiction to reform a written contract, when there has been a mistake of one party and there has been fraud or other inequitable conduct by the other party in reducing the contract to writing." Further, we held in Neary v. General American Life Ins. Co., 140 Neb. 756, 1 N. W. 2d 908, that: "Equity will decree reformation of a contract only if the mistake is mutual, or for fraud or inequitable conduct."

However, such foregoing general rules are applicable and controlling only in cases wherein fraud or mistake of fact has been appropriately established, which defendants failed to do in the case at bar. In that regard, in Meyer v. Schmidt, 135 Neb. 850, 284 N. W. 337, this court held: " 'There is no fraud where there is nothing wrong, and fraud cannot be deduced or inferred from that which the law pronounces honest.' 12 R. C. L. 237, sec. 8.

"The mere fact that a person is unlearned, and ignorant of legal proceedings, affords no ground for relief in equity, unless the person against whom relief is sought misrepresented the facts to him."

Also, in Du Teau Co. v. New Hampshire Fire Ins. Co., 156 Neb. 690, 57 N. W. 2d 663, involving alleged mistake, we held: "In an action for reformation of a written instrument, the burden rests upon the moving party of overcoming the strong presumption arising from the terms of the written instrument. If the proofs are doubtful and unsatisfactory and if there is a failure to overcome this presumption by testimony entirely plain and convincing beyond reasonable controversy, the writ-

ing will be held to express correctly the intention of the parties." See, also, Lovenburg v. Justice, 155 Neb. 406, 51 N. W. 2d 895.

Generally, upon the execution, delivery, and acceptance of an unambiguous deed, such being the final acts of the parties expressing the terms of their agreement with reference to the subject matter, all prior negotiations and agreements are deemed merged therein, in the absence of a preponderance of evidence clear and convincing in character establishing some recognized exception such as fraud or mistake of fact, and the deed will be held to truly express the intentions of the parties. 32 C. J. S., Evidence, § 913, p. 835; 16 Am. Jur., Deeds, § 445, p. 686; Gray v. Van Gordon, 187 Iowa 835, 174 N. W. 588; Neihart v. Ingraham, 140 Neb. 818, 2 N. W. 2d 28; Bingaman v. Bingaman, 85 Neb. 248, 122 N. W. 981, cited and quoted from with approval in Cunningham v. Brewer, 144 Neb. 211, 13 N. W. 2d 113. Such rules are particularly applicable and controlling here.

Other matters are discussed in briefs of counsel but they require no discussion. For reasons heretofore set forth, the judgment of the trial court should be and hereby is reversed, and the cause is remanded with directions to render judgment for plaintiff upon his petition and against defendants Hunt upon their cross-petition, in conformity with this opinion. All costs are taxed to defendants Hunt.

REVERSED AND REMANDED WITH DIRECTIONS

GENERAL ELECTRIC COMPANY, A CORPORATION, APPELLANT, V. J. L. BRANDEIS & SONS, A CORPORATION, APPELLEE.
68 N. W. 2d 620

Filed February 11, 1955. No. 33605.

Constitutional Law. The syllabus points in McGraw Electric Co. v. Lewis & Smith Drug Co., Inc., *ante* p. 703, 68 N. W. 2d 608, are by reference adopted as the syllabus points in this case.

APPEAL from the district court for Douglas County: JACKSON B. CHASE and JAMES M. PATTON, JUDGES. *Affirmed.*

Fraser, Connolly, Crofoot & Wenstrand, Lynn A. Williams, and *Hird Stryker, Jr.,* for appellant.

Kennedy, Holland, De Lacy & Svoboda and *Robert L. Berry,* for appellee.

Heard before SIMMONS, C. J., CARTER, MESSMORE, YEAGER, CHAPPELL, WENKE, and BOSLAUGH, JJ.

YEAGER, J.

This is an action in equity by General Electric Company, a corporation, plaintiff and appellant, against J. L. Brandeis & Sons, a corporation, defendant and appellee, instituted and tried in the district court for Douglas County, Nebraska. The case was tried to the court at the conclusion of which a decree was rendered in favor of the defendant and against the plaintiff. Following the rendition of decree a motion for new trial was duly made and regularly overruled. From the decree and the order overruling the motion for new trial the plaintiff has appealed.

This case was heard before this court at the same term as was McGraw Electric Co. v. Lewis & Smith Drug Co., Inc., *ante* p. 703, 68 N. W. 2d 608, in which an opinion was adopted wherein the basic issues on which the determination was made to depend were substantially the same as those upon which the determination herein must depend.

The attack in this case, as in that one, is upon the constitutionality of chapter 136 of the Laws of 1937, known as the Fair Trade Act, which now appears as sections 59-1101 to 59-1108, R. R. S. 1943, and section 59-801, R. R. S. 1943. The attack in the pleadings is not made in the same form in this case as in that one but it is in similar substance. Of course the parties are not the same.

It appears therefore sufficient to define the factual situation upon which the cause of action and the defense are predicated and adopt and apply thereto as controlling, by reference, the observations made in the opinion of McGraw Electric Co. v. Lewis & Smith Drug Co., Inc., *supra.*

These facts are substantially that plaintiff is a corporation organized under the laws of the State of New York; that it is engaged in the business of manufacturing electric housewares, clocks, automatic blankets, vacuum cleaners, fans, heating pads, heaters, and heat lamps, and of selling the same throughout the State of Nebraska, which appliances bear the plaintiff's trademark, "General (GE) Electric," and are in free and open competition in the State of Nebraska with commodities of the same general class produced and distributed by others; that the defendant is a corporation organized under the laws of the State of Nebraska and is engaged in the retail sale of electrical appliances at its department store in Omaha, Nebraska; that pursuant to the Nebraska Fair Trade Act the plaintiff entered into agreements with distributors and retail dealers in the State of Nebraska whereby minimum retail resale prices for the appliances of plaintiff were established; but that the defendant, though having full knowledge of such agreements and not coming within any exceptions provided in the act, willfully and knowingly advertised, offered for sale, and sold such appliances at retail at prices below the established minimum price.

These facts are not denied. The defense is that the act and particularly section 59-1105 thereof are unconstitutional.

Applying the observations made in McGraw Electric Co. v. Lewis & Smith Drug Co., Inc., *supra,* to the factual situation in this case, the conclusion is that the Fair Trade Act (Laws 1937, c. 136, p. 478) as well as section 59-1105, R. R. S. 1943, thereof (Laws 1937, c. 136,

§ 5, p. 480), are unconstitutional and void and that the decree of the district court should be and it is affirmed.

AFFIRMED.

IN RE ESTATE OF ANNA COOK, DECEASED.
EARL COMSTOCK ET AL., APPELLEES, V. E. H. EVANS, ADMINISTRATOR OF THE ESTATE OF ANNA COOK, DECEASED, APPELLANT.
68 N. W. 2d 351

Filed February 11, 1955. No. 33606.

1. **Work and Labor.** The general rule is that where services are rendered by one party for another, and knowingly accepted by him, the law implies a promise on his part to pay what such services are reasonably worth.
2. **Work and Labor: Evidence.** The opinion of a qualified witness as to the value of the services is admissible to prove such value when his testimony will aid the jury. This question is within the judicial discretion of the trial court to decide, and rulings thereon will not be reversed except in case of manifest error.
3. **Trial.** A motion for a directed verdict challenges the right of the party against whom it is directed to recover in any amount.

APPEAL from the district court for Lincoln County: JOHN H. KUNS, JUDGE. *Affirmed.*

Baskins & Baskins and *E. H. Evans,* for appellant.

Hollman & McCarthy and *Halligan & Mullikin,* for appellees.

Heard before SIMMONS, C. J., CARTER, MESSMORE, YEAGER, WENKE, and BOSLAUGH, JJ.

SIMMONS, C. J.

This action originated as a claim against an estate for services rendered a deceased person in her lifetime. Claimants are husband and wife, and will hereinafter be referred to as plaintiffs. The administrator of the estate will hereinafter be referred to as defendant. The deceased will be referred to as Mrs. Cook.

The claim was allowed in county court for the sum of $7,140. Defendant appealed to the district court where there was a jury trial resulting in a verdict and judgment for the plaintiffs in the sum of $5,321. Defendant appeals, arguing here that the trial court erred in admitting and allowing the jury to consider the evidence of a witness as to the reasonable value of the services rendered, and in not sustaining a motion for a directed verdict.

We affirm the judgment of the trial court.

Plaintiffs pleaded that during the year 1934 they promised the deceased that they would perform services for her to consist of cooking, sewing, personal care, baking, chauffeuring, carpenter work, and other sundry duties to be requested by her; that deceased promised to pay them in money or property upon her death; that they performed the services requested; and that they sought judgment for the reasonable value thereof.

Defendant answered denying generally and specifically that there was any contract between the parties under which any services were rendered; and alleging that the plaintiffs and deceased were friends and neighbors and that services were exchanged upon a voluntary and gratuitous basis.

Defendant made a motion for a directed verdict at the close of plaintiffs' case-in-chief and again after both parties rested. The motions were overruled.

It is clear from the record that the case was tried on the theory of an implied contract. We are not here dealing with a case involving a family relationship nor with the presumptions that follow from it. We are here dealing with a case involving the general rule that where services are rendered by one party for another, and knowingly accepted by him, the law implies a promise on his part to pay what such services are reasonably worth. Bell v. Rice, 50 Neb. 547, 70 N. W. 25.

We state the evidence insofar as it seems necessary to determine the assigned errors that are argued here.

Plaintiffs are an elderly couple and lived, at all times material here, in and near Hershey in Lincoln County.

Mrs. Cook lived on a farm or farms in that neighborhood. Her family at the beginning of this period consisted of her husband, a married daughter and husband, a sister, and a boy whom she raised and who took the name of Joe Cook. The daughter died in 1934, and no further mention is made of the daughter's husband as a member of the family. Mrs. Cook's husband, who had not been in good health and was elderly, died in 1936. This left Mrs. Cook, her sister, and the boy, Joe, as the family unit. Joe was at the home most of the time until he entered the army during World War II. He returned and became employed in North Platte. It is not shown that there was any particular disturbance in the relationship of Joe and Mrs. Cook.

Mrs. Cook owned, lived on, and managed a substantial irrigated farm. She looked to her tenants and her friends for many services. She repeatedly and almost constantly requested services of the plaintiffs. The evidence contains statements of specific times services were rendered by the plaintiff husband, including driving and furnishing his own car, performing errands, and working about the farm and Mrs. Cook's home at her request. Witnesses testified to similar matters generally as having occurred almost time without number. There is also evidence that Mrs. Cook repeatedly, and on many occasions, would advise plaintiffs that she was coming to eat with them, do so, and then take food to her home; and that she repeatedly asked for and was furnished with prepared food, pastries, etc. There is also evidence of sewing which the plaintiff wife did for Mrs. Cook. There is likewise evidence that Mrs. Cook repeatedly said that she expected to pay, and that plaintiffs would be well paid for what they had done and were doing for her. There is mention of money to be paid to the plaintiffs, of property to be willed to them, and of the purchase of a home for plaintiffs in Hershey.

Nothing of this kind was done so far as this record reveals.

Defendant's evidence is corroborative of plaintiffs' evidence so far as services are concerned. It contains statements made by Mrs. Cook that every one who had helped her had been well paid including, either directly or inferentially, the plaintiffs. There is also evidence of one of defendant's witnesses that Mrs. Cook had said plaintiffs had asked her to buy or help them to buy a home in Hershey and that Mrs. Cook did not do it.

Defendant's first argued assignment of error relates to the admission and failure to strike the testimony of a witness for plaintiffs. We accordingly make a more detailed recital of that evidence.

This witness on direct examination testified that he was engaged in the general merchandise and "locker plant" business at Hershey and had been so engaged for 16 years. He was familiar with the market value of labor in that community, and was an employer of labor. He had heard substantially all of the testimony offered by plaintiffs. He knew plaintiffs and Mrs. Cook. Limiting his answer to the time from the spring of 1935 to the date of Mrs. Cook's death in 1952, he was, over objection, permitted to testify that the reasonable value of the services rendered by the plaintiffs was $2 per day.

On cross-examination, he stated that he was "taking an average for the period," "a 16-year period," "the over-all picture of the thing"; that "the man was on call for nearly every day"; that he took into consideration "the mileage, the services and the time they put in"; that these plaintiffs were faithful, stood around and did jobs; that he did not know how many hours or days plaintiffs worked but they were on call every day of the year; and that he took the baking and sewing into consideration in the "over-all services." On cross-examination, the witness further testified that: "In 1934 when the dry times were here and cattle were down a man would earn $3.00 a day," and in "that kind of work" "A dollar

a day for that period"; that being on call "at that time" was worth "a dollar a day" to Mrs. Cook; that he had paid employees on that basis as a "store boy" and for "odd jobs"; that mileage for the use of a car "would be, say seven cents a mile"; that the price of pies was from 55 cents to 70 cents each during the period, and the price of cakes was from 85 cents to $1.95; and that women doing odd jobs were paid $4.50 a week. This evidence went to the specific values of the type of services rendered and things furnished Mrs. Cook by the plaintiffs.

The defendants moved "to strike the testimony of the witness E. T. Young as to the value of the services testified to." The motion was overruled.

The motion for a new trial asserted error in failing to strike the evidence of E. T. Young as to his estimate of value of services and in permitting the jury to consider it. The assigned error here is that the court erred in admitting the testimony of the witness, in not striking it, and in permitting the jury to consider it. The argument here is that the court erred in admitting and in not striking the testimony.

It is patent that the attack from the beginning has been directed to all the testimony of this witness. However, in argument here, the testimony that the services were worth $2 a day is specifically mentioned.

Defendant argues here that by calculation an allowance of $1 a day for 6 days a week for 17 years equals the jury's verdict of $5,321. Assuming that the jury followed such a process, it is obvious that they accepted, not the $2-a-day opinion testified to by the witness on direct examination, but the $1-a-day opinion expressed on cross-examination. In a case involving the value of the services of a plaintiff, we held: "* * * the opinion of a qualified witness as to the value of the services is admissible to prove such value when his testimony will aid the jury and this question is within the judicial discretion of the trial court to decide, and rulings thereon

will not be reversed except in case of manifest error. * * * A witness who has observed the services rendered and has sufficient familiarity with services of that nature to form a reasonable opinion as to their value, is qualified. He need not be an expert in the strict sense of that term if he is shown to be better equipped to determine the value of the services than the jury or men in general. Also, persons engaged in performing services of the same character as those to be valued, and persons who have knowledge of the business in and for which the services have been rendered, and of their value, may give their opinion as to the value of the services." In re Estate of Baker, 144 Neb. 797, 14 N. W. 2d 585, 155 A. L. R. 950. See, also, Missouri P. Ry. Co. v. Fox, 60 Neb. 531, 83 N. W. 744; Omaha Loan & Trust Co. v. County of Douglas, 62 Neb. 1, 86 N. W. 936; Jensen v. Palatine Ins. Co., 81 Neb. 523, 116 N. W. 286; DeVore v. Board of Equalization, 144 Neb. 351, 13 N. W. 2d 451.

We find no manifest error in the rulings of the trial court. The error assigned and argued is not sustained.

Defendant's second argued assignment is that the court erred in not sustaining the motion for a directed verdict.

A motion for a directed verdict challenges the right of the party against whom it is directed to recover in any amount.

The evidence is reviewed here subject to the rule that: "Where a motion for a directed verdict is made the party against whom it is made is entitled to have his evidence accepted as true by the court and he is further entitled to have all favorable inferences reasonably to be drawn therefrom resolved in his favor." Segebart v. Gregory, 156 Neb. 261, 55 N. W. 2d 678.

Obviously under this record there is evidence from which a jury could rightly find that the plaintiffs were entitled to recover in some amount. The trial court

did not err in overruling the motions for a directed verdict.

The judgment of the trial court is affirmed.

AFFIRMED.

CHAPPELL, J., participating on briefs.

BETTY JANE WATKINS, APPELLANT, V. MYRON E. DODSON, APPELLEE.

68 N. W. 2d 508

Filed February 11, 1955. No. 33614.

1. **Constitutional Law.** Due process of law in the most comprehensive sense implies the right of the person affected thereby to be present before the tribunal which pronounces judgment upon the question of life, liberty, or property, to be heard by testimony or otherwise, and to have the right of controverting by proof every material fact which bears on the question of right in the matter involved.
2. ———. This is a right of which the property owner cannot be deprived by the courts, the city council, or the Legislature.
3. **Eminent Domain: Constitutional Law.** Even actual knowledge of the owner of the appointment of the appraisers under an unconstitutional act cannot operate as a substitute for notice required by due process of law. The law must require notice and give a right and an opportunity to be heard.
4. ———: ———. Section 72-240.06, R. R. S. 1943, fails to provide for notice to be given the owner of improvements so that he may appear before the appraisers and protect his rights and, for failure to so provide, is unconstitutional and void.
5. **Constitutional Law: Statutes.** An unconstitutional statute is a nullity, is void from its enactment, and is incapable of creating any rights or obligations.
6. **Eminent Domain: Constitutional Law.** Where a litigant did not ask that an appraisement be made, took no part in it, only obtained knowledge of an appraisement when the county commissioners made and filed their report as provided for in section 72-240.06, R. R. S. 1943, and did not invoke said section or seek any benefits thereunder, he is not estopped from raising the question of the constitutionality of such statute.
7. **Appeal and Error.** The right of appeal in this state is purely statutory and, unless the statute provides for an appeal from the decision of a quasi-judicial tribunal, such right does not exist.

8. **Forcible Entry and Detainer.** One purpose of the act empowering a justice of the peace to determine the issue in an action of forcible entry and detainer is to prevent even rightful owners of realty from taking the law into their own hands and recovering by violence what the remedial powers of a court would grant.
9. ———. Section 27-1404, R. R. S. 1943, provides for the notice to quit the premises in an action of forcible entry and detainer. This notice is a condition precedent to bringing the action of forcible entry and detainer and is not sufficient in and of itself to permit entry by a person claiming the right of possession of the land. Other steps must be complied with within the contemplation of sections 27-1401 to 27-1417, R. R. S. 1943, before a person may be dispossessed of unlawfully detaining the premises.

APPEAL from the district court for Perkins County: VICTOR WESTERMARK, JUDGE. *Affirmed.*

McGinley, Lane, Powers & McGinley, for appellant.

Bruce K. Lyon and *Henry W. Curtis,* for appellee.

Heard before SIMMONS, C. J., CARTER, MESSMORE, YEAGER, CHAPPELL, WENKE, and BOSLAUGH, JJ.

MESSMORE, J.

The plaintiff, Betty Jane Watkins, brought this action in the district court for Perkins County against the defendant, Myron E. Dodson, seeking to recover damages for alleged conversion of a wheat crop grown and harvested by the defendant upon described school land of which the defendant was a former lessee and the plaintiff a new lessee.

The plaintiff's petition alleged that she was the owner of a leasehold estate from the State of Nebraska, Department of Educational Lands and Funds, hereinafter referred to as the Board of Educational Lands and Funds, under school land lease No. 72602 covering Lots 1, 2, 3, and 4, Section 36, Township 9 North, Range 42 West of the 6th P. M., in Perkins County, and entitled to the immediate possession of the wheat crop grown on said leased land during the summer of 1952; and that on or

about June 25, 1952, the defendant wrongfully and tortiously, and with force prevented the plaintiff from harvesting the wheat crop but converted the same to his own use, resulting in damage to the plaintiff in the amount of $6,600.

The defendant, by amended answer, denied generally the allegations contained in the plaintiff's petition; alleged that sections 72-240, R. S. 1943, and 72-240.06, R. R. S. 1943, providing for appraisal of improvements and crops were unconstitutional; that the Perkins County board of county commissioners, in appraising said property, acted unconstitutionally in that it gave no notice to defendant of any hearing at which the appraisal was to be made, and gave the defendant no opportunity to introduce evidence as to the value of his crop; and that the defendant was not present at such appraisal and had no notice of the time and place of any appraisal of such crop.

The plaintiff's reply to the amended answer of the defendant denied all allegations therein contained except as had been admitted by the pleadings; alleged that the defendant was estopped from alleging the unconstitutionality of sections 72-240, R. S. 1943, and 72-240.06, R. R. S. 1943, for the reason that the defendant ratified the constitutionality of the statute by claiming a right to said crop under a lease issued to him by the Board of Educational Lands and Funds under the above sections of the statutes; and that the matter sought to be raised in the amended answer was res judicata by reason of the defendant having taken an appeal from the appraisement of the county commissioners of Perkins County which appraisement had been made pursuant to the provisions of the above-cited statutes.

A jury was waived and trial had to the court. The trial court found generally for the defendant and against the plaintiff; that the evidence failed to show any right of title in the plaintiff to the wheat crop; that the defendant came into possession of the land involved in

good faith under a purported lease issued by the Board of Educational Lands and Funds dated December 12, 1949; that said lease was a nullity, and by reason thereof the defendant at all times involved therein was a tenant at sufferance; that he was in actual and constructive possession of the school land involved, was the owner of the wheat planted on said land, and was entitled to harvest it; that the county commissioners of Perkins County made a purported appraisement of the wheat crop involved; that the Board of Educational Lands and Funds had no interest in the said crop, was without authority to compel the appraisement of the crop, and the purported appraisement was void; that the appeal taken by the defendant from the appraisement of the board of county commissioners did not constitute res judicata for the reason that the board of commissioners never obtained jurisdiction to appraise the property; and that the district court for Perkins County had no jurisdiction to hear the appeal. The trial court dismissed the plaintiff's petition. The plaintiff filed a motion for new trial which was overruled, and the plaintiff perfected appeal to this court.

We will refer to the parties as they were designated in the district court.

The defendant was in possession of the land involved in the instant case under and by virtue of a school land lease issued to him in 1925 which would terminate in 25 years, or on January 1, 1950. He made application for a new lease under section 72-240, R. R. S. 1943. Upon his application being received, the Board of Educational Lands and Funds issued to him a new 12-year lease under and pursuant to the authority of the provisions of section 72-240.01, R. R. S. 1943. The case of State ex rel. Ebke v. Board of Educational Lands & Funds, 154 Neb. 244, 47 N. W. 2d 520, affirmed by subsequent cases, determined that all leases executed pursuant to and under the authority of those statutes were a nullity. Therefore, in conformity with the resolution

of the Board of Educational Lands and Funds dated August 13, 1951, defendant was subsequently notified that his 12-year lease was canceled and void and would be subsequently offered for sale at public auction in accordance with the published notice provided for by law; that he would be given an opportunity to bid at the sale; that in the event some person other than the defendant should be the successful bidder, any improvements on the land would be appraised by a majority of the members of the board of county commissioners and the new lessee would be required to pay the amount of such appraisement; and that either the defendant or the new lessee could, if dissatisfied with the appraisement, take an appeal to the district court.

The plaintiff secured the lease by tendering the highest bid at public auction which was held on April 16, 1952. The only improvement existing on the land involved was a field of growing wheat. There was a report of the appraisement by the county commissioners of Perkins County made on the 26th day of May 1952, and delivered to the county treasurer of the said county which fixed the value of the improvement at $2,400. A check in the amount of $2,400, signed by the plaintiff by her husband E. L. Watkins, was executed and delivered on May 27, 1952, to the county treasurer in payment of the appraisement as fixed by the county commissioners. A receipt was executed by the county treasurer to the plaintiff covering this amount on May 28, 1952. The plaintiff, in addition, paid $321 rental as required by law, and $1,851 for bonus and lease fee on lease No. 72602.

The defendant paid the Board of Educational Lands and Funds the rent for the premises for the years 1950 and 1951.

On June 11, 1952, the defendant signed a duly verified petition on appeal in which he alleged that prior to April 16, 1952, he was the lessee of the land in question and planted 113 acres of summer-fallow wheat; that

said wheat remained on the real estate when it was sold by the state; and that he was entitled to compensation for the growing wheat as provided for by law.

On June 25, 1952, the defendant was served by the sheriff of Perkins County, or his deputy sheriff, with a notice signed by the plaintiff that she was the owner of the lease on the premises involved.

On or about June 26, 1952, the defendant was served by the sheriff of Perkins County, or his deputy sheriff, with a notice to quit the premises, signed by an assistant attorney general of the state.

During the year 1950, the defendant farmed the land, and during the summer of 1951, he summer fallowed it. During the latter part of August or the early part of September, the defendant planted wheat on the summer-fallowed land, this being the wheat in controversy in this action. The defendant completed the harvest of the wheat a little more than 3 days after being served with the notice to quit. There were 2,652.67 bushels of wheat harvested on the premises. The market value at the time the wheat was delivered to the elevator was $2.07 a bushel.

The appeal of the defendant from the county commissioners' appraisement was dismissed on the plaintiff's motion March 30, 1953.

On June 25, 1952, the husband of the plaintiff, acting as her agent, entered upon the land with a combine for the purpose of cutting and harvesting the wheat, and the defendant physically and forcibly restrained the plaintiff's husband from harvesting said wheat. The defendant had, 3 or 4 days prior to that time, started the harvesting of the wheat.

There is other evidence in the record which is not material to a determination of this appeal.

The principal assignments of error set forth by the plaintiff are as follows: (1) That the trial court erred in finding that the appraisement of the growing wheat on May 26, 1952, by the county commissioners of Per-

kins County was void; (2) that the trial court erred in finding that the defendant was the owner of and entitled to harvest the wheat involved on June 25, 1952; (3) that the trial court erred in finding that the defendant was in actual and constructive possession of the school land involved at all times pertinent to this case; and (4) that the trial court erred in finding that the appeal by the defendant from the appraisement of the wheat crop involved was not res judicata as to the issue of who was entitled to possession and ownership of the wheat.

The defendant in the instant case, under the facts presented, held only as a tenant at sufferance and was not entitled to notice to terminate except the 3-day notice to vacate required by section 27-1404, R. R. S. 1943, which was given as shown by the facts previously set out. See State v. Cooley, 156 Neb. 330, 56 N. W. 2d 129.

The defendant in the instant case had no lease of any kind, nor did he have a contract with the state or with the plaintiff. See, State v. Gardner, 156 Neb. 326, 56 N. W. 2d 135; State v. Cooley, *supra.*

The plaintiff contends that section 72-240.06, R. R. S. 1943, was the law exclusively governing the appraisement and disposition of the improvements, including crops on the school land on which the defendant planted a crop of wheat while he was holding as a tenant at sufferance in the fall of 1951.

In this connection, the plaintiff asserts that by virtue of the 25-year lease held by the defendant which had terminated, the defendant was holding the same subject to the terms and conditions of his 25-year lease insofar as the same was consistent with his tenancy; and that this would include the provisions of all of the Nebraska statutes relating to school leases. The plaintiff cites sections 72-217 and 72-218, Comp. St. 1929, being the statutes applicable to the defendant's old 25-year lease. We will not set forth the subject matter contained in these statutes. Section 72-218, Comp. St. 1929, above

cited contained substantially the same provisions as appear in section 72-240.06, R. R. S. 1943, which provides in part: "If the lease is made to a person other than the lessee, the value of all the improvements on the land shall be appraised by a majority of the members of the board of county commissioners * * *. Improvements to be included in such appraisement shall be * * * plowing for future crops and for alfalfa or other crops growing thereon. The appraisement herein provided for shall be made within thirty days after the entry of the new lease and after being signed shall be filed within five days with the county treasurer of the county in which the land is situated. The new lessee shall pay all costs of the appraisement. Either the lessee or the new lessee may, if he is dissatisfied with the appraisement, within thirty days after the filing thereof, appeal therefrom to the district court of the county in which the land is situated. The new lessee, if he be other than the former lessee, shall within thirty days after the filing of the appraisement pay to the county treasurer the amount of the appraisement."

We are not in accord with the plaintiff's contention as above set forth, but rather with the contention of the defendant that even in the event the appraisal statute was applicable to the case at bar, the same was unconstitutional for the following reasons: It does not provide for any hearing to be held by the appraisers; it does not provide for any notice to the owner of the property; and there is no requirement that the owner be given any notice or opportunity to be present when the appraisal is made.

The record does not disclose that the defendant was notified of hearing to be had before the board of county commissioners, nor was he afforded an opportunity to be present at the time the appraisal was made. Under the circumstances, we believe the following to be applicable.

In Webber v. City of Scottsbluff, 155 Neb. 48, 50 N.

W. 2d 533, the court said that the owner of property to be condemned is entitled to notice of the proceedings and an opportunity to protect his rights. Notice must be given the property owner so that he may appear before the appraisers and protect his rights.

The indispensable elements of due process are a tribunal with jurisdiction, notice of hearing to the proper party, and an opportunity for a fair hearing according to applicable procedures. See Ripley v. Godden, 158 Neb. 246, 63 N. W. 2d 151.

In Albin v. Consolidated School Dist., 106 Neb. 719, 184 N. W. 141, an eminent domain case, chapter 244, Laws 1919, was held to be unconstitutional for failure to provide for notice to the property owner of time and place at which the appraisers would meet for the purpose of making the appraisement. Actual knowledge of the owner of the appointment of the appraisers under an unconstitutional act cannot operate as a substitute for notice required by due process of law. The law must require notice and give a right and an opportunity to be heard. See, also, Chicago, R. I. & P. Ry. Co. v. State Railway Commission, 88 Neb. 239, 129 N. W. 439; People v. Tallman, 36 Barb. (N. Y.) 222; Wilber v. Reed, 84 Neb. 767, 122 N. W. 53.

As stated in 16 C. J. S., Constitutional Law, § 612, pp. 1225, 1229: "While the requirements of due process apply in respect of special or summary proceedings, the mere fact that the proceeding is special or summary in character does not of itself militate against the presence of due process of law. * * * It is, however, essential that due process attend all special and summary proceedings of a judicial character, * * * and where a special or summary remedy fails to afford the essential elements of due process of law it is invalid, * * *."

It is said that the deprivation of property without due process of law is inhibited by both the federal Constitution and the Constitution of the state. While the term "due process of law" may not be susceptible of a pre-

cise definition which will include all cases, yet it has ever been held to require an opportunity to be heard. Notice of some kind is essential, and because there is no provision in the statute in question for a notice or an opportunity to be heard it is violative of the constitutional provisions for the protection of property rights. Due process of law in the most comprehensive sense implies the right of the person affected thereby to be present before the tribunal which pronounces judgment upon the question of life, liberty, or property, to be heard by testimony or otherwise, and to have the right of controverting by proof every material fact which bears on the question of right in the matter involved. This is a right of which the property owner cannot be deprived by the courts, the city council, or the Legislature. See, McGavock v. City of Omaha, 40 Neb. 64, 58 N. W. 543; Wilber v. Reed, *supra.*

We believe, under the facts appearing herein and the authorities above cited, that section 72-240.06, R. R. S. 1943, is unconstitutional and void.

An unconstitutional statute is a nullity, is void from its enactment, and is incapable of creating any rights or obligations. See State v. Cooley, *supra.*

The plaintiff contends that the defendant accepted the benefits conferred by section 72-240.06, R. R. S. 1943, and is now estopped to deny its validity or application to his case, and that by appealing from the county commissioners' appraisement, the defendant became estopped to set up the ownership of the wheat in himself in the instant case.

The plaintiff asserts that the defendant, after receiving notice from the Board of Educational Lands and Funds that the alleged new lease that he held was void, by his silence acquiesced in the terms as contained in the notice, which terms were incorporated in section 72-240.06, R. R. S. 1943; and that he stayed on the land as a tenant by sufferance beyond the period and at the

termination of his 25-year lease which was the period covered by the rent he had paid.

The plaintiff cites the following: Lackaff v. Department of Roads & Irrigation, 153 Neb. 217, 43 N. W. 2d 576, to the effect that a party invoking the provisions of a statute is not in a position to raise the question of its constitutionality.

State ex rel. Johnson v. Consumers Public Power Dist., 143 Neb. 753, 10 N. W. 2d 784, 152 A. L. R. 480, is also cited to the effect that estoppel is most frequently applied in cases involving constitutional law when persons in some manner partake of advantages under statutes.

There is authority to the effect that one who voluntarily proceeds under a statute and claims benefits thereby conferred will not be heard to question its constitutionality to avoid resulting burdens. See 11 Am. Jur., Constitutional Law, § 123, p. 767.

No estoppel can arise where all the parties interested have equal knowledge of the facts, or where the party claiming estoppel has the some means of ascertaining or is chargeable with notice of the facts, or is equally negligent or at fault. See Scottsbluff Nat. Bank v. Blue J Feeds, Inc., 156 Neb. 65, 54 N. W. 2d 392.

Where the defendant did not ask that an appraisement be made, took no part in it, and only obtained knowledge of an appraisement when the county commissioners made and filed their report as provided for in section 72-240.06, R. R. S. 1943, and did not invoke said section or seek any benefits thereunder, he is not estopped from raising the question of the constitutionality of such statute.

As to whether or not the plaintiff's contention that the defendant, by undertaking to appeal from the appraisement of the county commissioners to the district court is estopped to set up the ownership of the wheat in himself, the only estoppel pleaded in the plaintiff's reply was to the effect that the defendant was estopped from raising the question of the constitutionality of the

appraisal statute, section 72-240.06, R. R. S. 1943, and that the matter sought to be raised in the defendant's amended answer was res judicata by reason of defendant having taken an appeal from the appraisement of the county commissioners, which appraisement had been pursuant to the provisions of section 72-240.06, R. R. S. 1943.

This court, in From v. Sutton, 156 Neb. 411, 56 N. W. 2d 441, making reference to section 72-240.06, R. R. S. 1943, said: "It seems self-evident that the Legislature intended, by the statute it enacted, to extend to any parties coming within the scope thereof the right to an appeal which would entitle them to a retrial of the whole cause but failed to provide any procedural method for lodging jurisdiction thereof in the district court. This failure of the statute to so provide defeats the right for, as already stated, the right to appeal together with the mode and manner thereof are purely statutory."

Any attempt to appeal by the defendant under section 72-240.06, R. R. S. 1943, would be a futile effort on his part. We conclude that the plaintiff's contention as above set forth cannot be sustained.

With reference to the plaintiff's husband acting as her agent and entering upon the land with a combine for the purpose of cutting and harvesting the wheat and being restrained by the defendant from doing so, it appears from the stipulation that 3 or 4 days prior to that time the defendant had started harvesting the wheat, and on June 26, 1952, the defendant was served by the sheriff, or his deputy, with a notice to quit the premises, signed by an assistant attorney general of the state acting for and on behalf of the Board of Educational Lands and Funds. We deem the following to be applicable to this situation.

In Miller v. Maust, 128 Neb. 453, 259 N. W. 181, it was held: "One purpose of the act empowering a justice of the peace to determine the issue in an action of forcible entry and detainer is to prevent even rightful

owners of realty from taking the law into their own hands and recovering by violence what the remedial powers of a court would grant." The court further stated: "'One great object of the forcible entry act,' says Gantt, J., in Myers v. Koenig, 5 Neb. 419, 422, 'is to prevent even rightful owners from taking the law into their own hands and attempting to recover by violence, what the remedial powers of a court would give them in peaceful mode.' Tarpenning v. King, 60 Neb. 213. * * * It was the purpose of the statute relating to forcible entry and detainer to prevent parties to a litigable controversy like the present from taking the law into their own hands. The issue was not ownership or title, but 'lawful and peaceable entry.'"

In addition thereto, our statutes, sections 27-1401 to 27-1417, R. R. S. 1943, govern the matter of forcible entry and detainer. Section 27-1404, R. R. S. 1943, provides for the notice to quit and that it shall be served at least 3 days before commencing the action. This notice is a condition precedent to bringing the action of forcible entry and detainer, and is not sufficient in and of itself to permit entry by the person claiming the right of possession to the land. Other steps in conformity with the above-cited statute must be taken to dispossess a person claimed to be unlawfully detaining the premises.

As stated in Woodcock v. Carlson, 41 Minn. 542, 43 N. W. 479, in speaking of the forcible entry and detainer statute of that state: "The statute (Gen. St. 1878, c. 84, § 11) has gone further than the common law, and has given the landlord the right, in any case where the tenant holds over 'after any rent becomes due, according to the terms of such lease or agreement,' to bring an action to recover possession of the premises. But while extending this remedy to the landlord, it nowhere provides that the commencement of such an action shall be equivalent to an entry, or work a forfeiture of the lease. On the contrary, the provisions of the statute

are wholly inconsistent with any such theory, and all point to the manifest legislative intent that, for the unlawful withholding of the possession during the pendency of the action, the lessor's sole remedy is the rental value of the premises." The opinion then sets out other steps in such a proceeding that are somewhat analogous to our statute with reference to forcible entry and detainer.

Under the facts as above set forth, the defendant had harvested the wheat crop in its entirety 4 days after the notice to quit was served upon him and, as previously stated, the notice to quit is merely a condition precedent to the bringing of an action in forcible entry and detainer. In other words, no action had been brought in forcible entry and detainer against the defendant when the wheat was harvested, and no judgment in such an action rendered against him. The defendant had the right to harvest the wheat and is not guilty of conversion as contended for by the plaintiff.

For the reasons given in this opinion, the judgment of the trial court is affirmed.

AFFIRMED.

BETTY J. FICK, ADMINISTRATRIX OF THE ESTATE OF THOMAS FICK, DECEASED, APPELLEE, V. MABEL C. HERMAN, DOING BUSINESS AS HERMAN OIL TRANSPORT COMPANY, ET AL., APPELLANTS, IMPLEADED WITH EDGAR CLIFTON, APPELLEE.

68 N. W. 2d 622

Filed February 18, 1955. No. 33591.

1. **Trial.** A motion for directed verdict or its equivalent, or for judgment notwithstanding the verdict, must be treated as an admission of the truth of all material and relevant evidence submitted on behalf of the party against whom the motion is directed, and such party is entitled to have every controverted fact resolved in his favor and have the benefit of every inference that can reasonably be deduced from the evidence.

2. ———. In every case, before the evidence is submitted to the jury, there is a preliminary question for the court to decide, when properly raised, not whether there is literally no evidence, but whether there is any upon which a jury can properly proceed to find a verdict for the party producing it, upon whom the burden of proof is imposed.
3. **Appeal and Error: Trial.** It is reversible error for the trial court to include in its instructions allegations of fact found in the pleadings which have not been supported by the evidence.
4. **Automobiles: Trial.** An instruction which indicates that it was the duty of the driver of a motor vehicle to avoid a collision if possible is prejudicially erroneous. Such driver is not required to have such control of the vehicle as would prevent a collision by anticipation of negligence or illegal disregard of traffic regulations, and such an instruction places too great a duty upon the driver of the motor vehicle.
5. **Automobiles: Negligence.** The driver of a motor vehicle has a duty to exercise reasonable or ordinary care, that is, the degree of care and caution which an ordinary prudent person would exercise under similar circumstances, and requires such a driver to seek to avoid a likely or threatened collision.
6. ———: ———. As a general rule, it is negligence as a matter of law for a motorist to drive a motor vehicle so fast on a highway at night that he cannot stop in time to avoid a collision with an object within the area lighted by his lights, but there are well-established exceptions thereto, dependent upon the nature or condition of the object in relation to conditions on or adjacent to the highway, adversely affecting immediate visibility of the object.

APPEAL from the district court for Dodge County: FAY H. POLLOCK, JUDGE. *Reversed and remanded.*

Wear & Boland, M. D. Cook, and *John E. North,* for appellants.

Sidner, Lee, Gunderson & Svoboda, for appellee Fick.

Spear, Lamme & Simmons, for appellee Clifton.

Heard before SIMMONS, C. J., CARTER, MESSMORE, YEAGER, CHAPPELL, WENKE, and BOSLAUGH, JJ.

MESSMORE, J.

This is an action at law brought in the district court for Dodge County by Betty J. Fick, administratrix of

the estate of Thomas Fick, deceased, to recover damages for the wrongful death of Thomas Fick caused by a collision between an automobile driven by the defendant Edgar Clifton, in which Thomas Fick was a passenger, and a stalled truck owned by the defendant Mabel C. Herman, doing business as the Herman Oil Transport Company, and Marvin G. Melia, the driver of the truck. The case was tried to a jury resulting in a verdict in favor of the plaintiff and against the defendants Mabel C. Herman and Marvin G. Melia, fixing the amount of the plaintiff's recovery in the sum of $18,000, and finding the plaintiff not entitled to recover against the defendant Edgar Clifton. Judgment was rendered on the verdict. The defendants Mabel C. Herman, doing business as the Herman Oil Transport Company, and Marvin G. Melia filed a motion for judgment notwithstanding the verdict or, in the alternative, for a new trial, which was overruled. The defendants Mabel C. Herman, doing business as the Herman Oil Transport Company, and Marvin G. Melia perfected appeal to this court.

The defendant Mabel C. Herman, doing business as the Herman Oil Transport Company, will hereinafter be referred to as the company, and the defendant Marvin G. Melia will hereafter be referred to as Melia or the driver of the company truck.

There is in evidence a map covering an area of 2,700 feet between Ashland and Greenwood which shows U. S. Highway No. 6, the shoulders on each side thereof which are 10 feet in width and very uniform along the north side of the highway, two side roads, and also station numbers 100 feet apart. This is a paved highway which was completed in June 1952, and is 24 feet in width. The elevation at the top of a hill which is toward the east, that is toward Ashland, is 1,112 feet above sea level. At a bridge which is at station No. 727, the elevation is 1,093 feet, and at the middle station the elevation is 1,097.1 feet. This highway runs north-

east and southwest. The greatest slope occurs between stations 740 and 733, at which point it is approximately 2 feet per 100, a moderate slope or a 2 percent grade. For some distance east and west on this highway to the point where the accident occurred, the highway is rather straight, without curves or obstructions.

The record discloses that Melia, who had been employed by the company for about 2 weeks, reported at its terminal in Omaha at 2 a. m., February 9, 1953. He was a student driver and that day worked with Don Wilson, a regular driver for the company. Both drivers were experienced in handling commercial trucks in interstate commerce. They picked up a transport consisting of an International KB-8 tractor and a Fruehauf tank trailer used for transporting gasoline in interstate commerce. They left the terminal at 2:15 or 2:20 a. m., for Council Bluffs, Iowa, to go to the Standard Oil pipe line station where they arrived at about 2:45 a. m. Wilson drove the transport to Council Bluffs. Arriving at the Standard Oil pipe line station they gave an order to the man in charge. At that time they checked the valves and waited for the order to be filled. This load consisted of 5,830 gallons of gasoline, and it took from 20 to 30 minutes to fill the tanks. The transport had not been checked for gas and oil at the terminal as was customary. It appears in a pamphlet of the company that the preceding driver who brought the transport in was charged with that duty. There were no fuel gauges on the dashboard of the tractor indicating the fuel available to operate the transport. The cargo tank was sealed as required by law. They signed the bill receipting for the gasoline and proceeded, with Wilson driving, back to Nebraska to the port of entry where they obtained clearance papers showing the amount of gasoline being transported into Nebraska for tax purposes. They left the port of entry, with Melia driving, at about 3:30 a. m., finally arriving on U. S. Highway No. 6 proceeding southwest to Lincoln. The destination of the

cargo was Cortland. Shortly after passing through Ashland, while driving at a speed of 30 to 35 miles an hour over the crest of a hill, Melia encountered engine trouble which indicated by the sound that one of the saddle tanks was out of gas. He immediately reached down and turned the selector valve, thinking there was gas in the other tank. He let the truck roll in gear with the idea that it would draw fuel from such tank into the carburetor. He stopped the transport 4 or 5 inches from the right edge of the pavement, as close thereto as he could get. He described the transport as having headlights, parking lights, and at the top of the cab orange or amber lights, three lights over the cab which were amber, and lights on each side of the tank approximately in the center thereof, which would show amber forward and red to the rear. At the rear of the truck, at the circle of the tank, there were two clusters of three lights on the right side and on the left side, and below the bumper there were two taillights 3 inches by 7 inches. The cluster lights were red, the taillights red, the stop light yellow or black, and the word "stop" would show up in yellow lettering. The tractor was red with a white tank, and the rear bumper painted black with white stripes similar to any barricade.

When Melia stopped the truck he put on the emergency brake and put the truck into first gear. He shut off the headlights and left the parking lights on, also the taillights which were 3 inches in diameter and colored red. The lights on the side of the tractor and the back end remained on, as they were on a separate switch. The two drivers got out of the truck and proceeded to set out flares which were new and met legal requirements. One flare was set behind and to the side of the left rear wheel of the tandem. It was to the north of the center line of the highway. Another flare was placed at a point 100 feet or more east of the truck on the north edge of the pavement. The base of the flare was placed parallel to the highway so that it could be

seen from either direction. When the headlights of an approaching automobile struck the reflectors there would be a red glow. Wilson set one flare to the west, practically the same number of feet, 100 feet or so, ahead of the truck on the south side of the highway on the pavement so it could be seen from either direction. They arrived at this point about 5 a. m., and it was dark. They then checked the saddle tanks to make sure they were out of gas, and found that they were. The truck stopped 1.9 miles east of Greenwood. Melia did not turn off of the highway because the shoulder was muddy and he did not want to mire the truck which weighed 57,403 pounds. He further testified that he and Wilson got back into the cab of the truck. They could see by two rear mirrors cars approaching from the rear of the truck, and could also see cars approaching from the front thereof. They saw a car coming and blinked their lights, but the car did not stop. A few minutes after this car left, a truck approached from the east. They started blinking the clearance lights. The truck pulled up beside them and stopped. The truck was proceeding west. Wilson caught a ride with the driver of this truck for the purpose of obtaining gasoline. After Wilson left, Melia stayed in the truck and when traffic came along he would blink his clearance lights as a warning. The clearance lights along the truck were burning. About 20 minutes after Wilson left, Melia checked the clearance lights and wiped them off with a small rag which he kept in the glove compartment. There was dirt on the back of the truck. The amount of dirt, and whether or not it obscured the lettering on the back of the truck, is in dispute. Melia climbed back into the cab and as traffic approached from either direction he would blink his lights to give warning as to the position of the truck along the highway. He estimated that between 50 and 75 vehicles passed without mishap.

Clayton Etmund, a farmer-trucker, testified that he was taking a load of cattle to Omaha. He came upon

the Herman transport parked along the highway at 5 or 5:15 a. m. He first noted the lights of the truck blinking. It was dark, and there was no fog. He observed the reflector flare on the shoulder of the highway next to the pavement 100 feet or more west of the truck. There was also a flare along side of the truck. The truck's clearance lights and travel lights were on. He did not stop, but saw a flare after he had passed the truck. He first saw the lights on the truck as he came over a rise on the pavement about a couple of blocks distant. He believed that the lights of his truck would show 3 blocks. He did not see the east side of the flares.

Alva L. Smith testified that he was driving a truck load of cattle to South Omaha. As he left Greenwood shortly before 6 a. m., he was driving about 45 miles an hour. He saw the oil transport when he was about 500 feet from it, by noticing the clearance lights and the cluster of lights blinking. He saw the outline of the truck when he was 100 or 150 feet from it. He observed a reflector flare on the right side of the pavement as he was proceeding east. It was close to 100 feet in front of the truck. He did not stop, but slowed down to 20 or 25 miles an hour. After he passed the truck he looked through his rear-view mirror and could see the back end of the truck which had red lights on the rear and each side thereof up to the top in a cluster. It was dark; there was no fog; and it was shortly before 6 a. m., when he arrived at this point. He noticed other flares, one behind the truck on his left at the edge of the pavement about 100 feet east of the back end of the truck. He did not see any flare right by the oil truck.

Don Daniel testified that he was driving an oil transport for the F and M Oil Corporation. When he came over the rise in the road he saw clearance lights and flares. The lights were blinking. This was about 6:15 a. m. It was dark. He noticed a flare along the side of the truck and one in front of it. He stopped. The clearance lights were on and the cab lights were on.

He asked the driver if he needed help. The fuel tanks on his truck had some gas, but the driver did not ask for any gas.

A general foreman for the Wood Crafts, Inc., of Lincoln, Nebraska, was traveling from his home in the vicinity of Ashland to his place of work. He left his home at 6:10 a. m., and arrived at the point where the Herman transport was stalled at about 6:25 a. m. It was dark, the weather was clear, and the pavement dry. When he reached the vicinity of the bridge he saw the lights blinking on the transport. There was a car ahead of him which went around the transport, and he slowed down. The lights of the transport were a "dirty red." He recalled seeing two reflector flares, one in the middle of the pavement on the side of the truck and one on the right side of the highway back of the transport. He was unable to approximate distances. He testified that the back end of the transport was dirty.

Edgar Clifton testified that he was employed by the Burlington Railroad; that on February 9, 1953, he was working the 7:30 a. m. to 4 p. m. shift at the Havelock shops in east Lincoln; that he left his home in Ashland for work, driving a 1936 Ford coach; that at approximately 6:30 a. m., he picked up a fellow employe, Thomas Fick, in the east part of Ashland. He and Fick had an agreement that they would provide transportation every other day to Greenwood, and they had an agreement with a party in Greenwood that each would provide transportation every third day from Greenwood to Lincoln. On the way from Ashland to Greenwood he, with his passenger Fick sitting beside him to the right, proceeded at a speed of 50 miles an hour. It was dark and there was fog in places. When he reached the bottom of the slope southwest of Station 742 on U. S. Highway No. 6 near Ashland, a big freight truck blinked its lights to go around the automobile of this witness. He slowed his speed to 40 miles an hour. The freight truck did not interfere with his driving, except that it kicked up a

little dust and then disappeared out of sight on account of the fog. A few seconds after this truck had gone around him, he was driving along and all at once there was a "bang" and he did not know what he had hit. He had his lights on dim, and they would throw a beam about 300 feet. He did not see any flares, any lights, or the object that he hit.

Melia testified that as he sat in the cab of the transport he was able to see traffic from behind by glancing in the rear-view mirror; and that he saw the Clifton car coming over the break of the hill behind him and started blinking his clearance lights by pushing the dashboard switch in and pulling it out continuously. The Clifton car did not slacken its speed nor turn to the left, but come straight ahead and hit the transport. The force of the impact moved the transport, with the brakes set, about a foot forward. The heavy steel torsion arms which fasten the left rear tandems to the frame of the tank trailer were broken off, and the front end of the 1936 Ford was completely mashed in.

A driver for Union Freightways testified that he stopped on the highway about 6:30 or quarter till 7 a. m., when he was attracted by the rear lights and clearance lights of the transport blinking. He observed reflector flares, the first of which was 100 feet to the rear of the trailer on the right side of the pavement near its edge. He saw a flare near the center line to the rear of the trailer. He pulled his semi-trailer cargo van around the transport. As he did so, he saw a flare on the south side of the road approximately 100 feet ahead of the truck. He pulled up and stopped about 100 feet ahead of the transport. He had no difficulty in passing the transport. He got out and went back and asked the driver if he could help. Melia did not ask him for gas. This witness testified that his truck was equipped with safety tanks, saddle tanks that you cannot get the gas out of. There was no seat tank. He saw the Clifton car

jammed into the transport. The lights on the transport were left burning.

Another driver for the same company arrived at the scene of the accident between 6:30 and quarter till 7 a. m., and was the second vehicle to stop there. He first saw the rear clearance lights of the transport when he was from an eighth to a quarter of a mile away. He then saw a man waving a flashlight. He started slowing down, and saw a reflector flare 75 to 100 feet behind the transport. He parked his truck and helped flag traffic on both sides of the highway.

A chief inspector of the safety division of the Department of Labor of the State of Nebraska, testified that he arrived at the scene of the accident at approximately 6:30 a. m. West of Ashland he saw a dark object in the reflection of his own lights. He saw no lights on this object. When he got closer, he saw an accident involving an old car and a gasoline transport. There was no activity in the vicinity, and no other vehicles, trucks, or ambulances were there. He did not stop. He saw no reflector flares close to the old car and gasoline transport.

William Mason, an electrician and lineman employed in Lincoln, left his home in Ashland to go to Lincoln. He had the lights on his car turned on. It was about 6:45 a. m. He saw a man on the highway flagging traffic with a flashlight. He saw no flares back any distance from the transport. He came to a stop 100 feet from the oil transport, behind the Clifton car. He went to the scene of the accident. There was an ambulance there and he helped take Fick out of the Clifton car and load him in the ambulance. He further testified that his car was the first car parked back of the Clifton car and others arrived thereafter; that it was just between daylight and dark, and it was hard to see; that the shoulder from the top of the incline on the east to the scene of the accident was from 10 to 12 feet wide and uniform in width; that he had previously driven a truck; and that

the shoulder from the top of the incline on the east to the scene of the accident was wide enough on which to drive the Herman oil transport. The shoulder was level, and was wet. He did not see any flares near the scene of the accident, and no lights other than the waving flashlight.

An accountant for the Goodyear Tire and Rubber Company testified that when he left home approximately 3 miles west of Ashland about 6:30 a. m., it was almost completely dark and he had the lights burning on his car. When he was approximately on the bridge at the bottom of the slope going west he saw a red light waving, and as he came closer to the accident he saw a man waving a flashlight. He slowed down, and he saw no flare on the right edge of the pavement at a posiiton of 100 feet back of the scene of the accident and no reflector flare in the vicinity of the accident. This was about 6:35 a. m. He was about 50 or 60 yards behind the place of the accident when he first saw the vehicles involved in the accident. There were no lights at the scene of the accident when he pulled around the transport. There was another truck ahead of the transport. It had its taillights on and reflectors. The person holding the flashlight waved him on.

A carpenter living in Ashland, riding toward Lincoln with another party about 6:30 a. m., testified that they were stopped by a man on the highway and parked their car. He got out of the car and went forward to see if he could be of any assistance. He walked up the right side of the highway along the north edge of the pavement for about 200 feet. He did not see any type of flare along the right edge of the pavement. He ran across the highway from the north to the south and got into the ambulance which was directly across from the Clifton car in the other lane of traffic. It was just starting to get light. He got into the ambulance and looked over the scene of the accident from his seat in the ambulance. He did not see any reflector flare in the vicinity of the

accident. He did not remember any fog, but said it was a "gray morning."

The father-in-law of the deceased, a carpenter employed by the state, testified that he drove from Ashland to his work in Lincoln in his own car. He left home about 7 a. m. It was dark enough to have the lights on his car turned on when he left. The weather was damp. When he got past the bridge at a point about 4 miles west of Ashland, he came upon the accident. He could see the back end of a truck and taillights of cars in front of him. He stopped his car and got out on the running board and waited for traffic to open up. At this point he saw the back end of the transport and very small lights on the transport. He was about 200 feet from the transport. He could not see much of the north edge of the highway, and could not look down the middle of the highway because the truck had it obstructed.

A state safety patrolman testified that the accident was located on U. S. Highway No. 6, about 4 miles west of Ashland and about 1.9 miles east of Greenwood. He was notified of the accident at 6:55 a. m. When he arrived at the scene of the accident about 7:20 a. m., he noticed a car immediately behind the gasoline transport that was parked on the highway, and fixed the location of the parked transport, by virtue of paving station imprint numbers on the concrete, as being 100 feet east of station 721. The accident happened on a slight upgrade looking from the east, and west of a bridge on the highway. He talked to Melia at the scene of the accident. Melia told this witness that he had run out of gas and had stopped on the highway about a quarter till 5 a. m. When this witness arrived there were reflector type flares in place, but he did not know when they were placed in position. He estimated the shoulders at the scene of the accident to be approximately 10 feet wide. The back end of the transport was white with considerable mud or a light covering of dirt on it. To the right

of the highway at the scene of the accident there was a rather shallow ditch. The shoulder was wide enough to drive the transport upon it. The transport was 8 feet wide and there was a clearance of 15 feet 8 inches on the pavement for vehicles to pass around it. The right rear wheel of the transport was 8 inches from the north edge of the pavement. The shoulder of the highway was muddy. He drove his car onto the shoulder of the road. It weighed approximately 3,200 pounds. He tested the shoulder by driving the right front wheel on first, but he had difficulty in getting his car off of the shoulder onto the highway when he left. He saw no skid marks behind the Clifton car.

Don Wilson, the driver who was with Melia, corroborated Melia's testimony. He further testified that he obtained a ride with a truck driver to endeavor to get gasoline. He first went to Greenwood, about 2 miles from the scene of the accident. There was a filling station in Greenwood but it was not open. He then decided to go to Waverly. There was a filling station there but it was not open. The only remaining thing for him to do was to go to Lincoln, and at Jacob's service station, the first filling station on the northeast side of the city, he obtained five gallons of gas. He got a ride in the first car going east with a couple of men who were on their way to Ashland. When he got back to the scene of the accident he observed a Ford car had collided with the transport directly behind the trailer. The ambulance came shortly after he returned. All of the lights on the truck except the headlights were burning when he left and they were the same when he returned. The flares were still out as they had been placed originally. He was at the scene of the accident 10 or 15 minutes before the ambulance came. He helped remove a passenger who was in the Ford car to the ambulance and then stayed until another ambulance arrived. He helped remove the other man from the car and went with the ambulance to the hospital. He notified the Herman Oil

Company of the accident and returned to the scene of the accident with the ambulance driver. The state safety patrolman was there the second time he returned.

The passenger in the Clifton car, Thomas Fick, died as a result of the accident.

The foregoing is a general résumé of the evidence sufficient to a determination of this appeal.

At the close of the plaintiff's testimony and at the close of all the testimony, the defendants Melia and Herman Oil Transport Company moved the court to discharge the jury and enter judgment in favor of them, or direct a verdict in favor of these defendants, which motions were overruled.

The defendants Herman Oil Transport Company and Melia, hereinafter referred to as appellants, assign the following as error: The trial court erred in advising the jury that the plaintiff claimed that the defendants Herman Oil Transport Company and Melia were negligent (a) in failing to use ordinary care to replenish the fuel supply for the oil transport and remove it from the highway after it had stalled thereon; (b) in parking or leaving the oil transport standing on the paved portion of the highway without sufficient reason, when plaintiff says it was practicable to park it off the paved and main-traveled portion of the highway; (c) in failing to put out flares to warn travelers upon bringing the truck to a stop; and (d) in failing to give adequate warning to travelers.

Before taking up the foregoing assignments of error, we cite the following authorities as being applicable.

A motion for directed verdict or its equivalent, or for judgment notwithstanding the verdict, must be treated as an admission of the truth of all material and relevant evidence submitted on behalf of the party against whom the motion is directed, and such party is entitled to have every controverted fact resolved in his favor and have the benefit of every inference that can reasonably be

deduced from the evidence. See Peake v. Omaha Cold Storage Co., 158 Neb. 676, 64 N. W. 2d 470.

In every case, before the evidence is submitted to the jury, there is a preliminary question for the court to decide, when properly raised, not whether there is literally no evidence, but whether there is any upon which a jury can properly proceed to find a verdict for the party producing it, upon whom the burden of proof is imposed. Fairmont Creamery Co. v. Thompson, 139 Neb. 677, 298 N. W. 551.

With the foregoing authorities in mind we proceed to a determination of the above assignments of error.

The appellants requested the court to withdraw the issue in assignment of error (a) from the jury, which the court refused to do.

In Plumb v. Burnham, 151 Neb. 129, 36 N. W. 2d 612, we said: "The mere stalling of a motor vehicle temporarily upon the highway, caused by an exhaustion of the gas supply, would not ipso facto constitute negligence as a matter of law, * * *."

We will not repeat the evidence with reference to this assignment of error except to say that Wilson obtained a ride about 5:20 a. m., for the purpose of procuring gasoline to replenish the gas supply of the transport, and returned shortly after 6:30 a. m. There is no evidence that he could have obtained gas at any other gas station, nor is there evidence that Melia would have been able to obtain gas from any of the trucks that stopped at the scene of the accident. He was not obligated to break the seal on the cargo tank, as to do so would have been in violation of the law. We think the evidence shows that the witness Wilson did what any reasonable, prudent person would ordinarily have done under the circumstances and nothing that a person would not have done. We find, as a matter of law, that there is no evidence of conduct on the part of the witness Wilson on which a jury could have found that he was negligent, and the trial court committed prejudicial

error in submitting the above issue to the jury.

With reference to assignment of error (b) above, the appellants requested the trial court to remove this issue from the consideration of the jury which the trial court declined to do.

Section 39-757, R. R. S. 1943, provides in part: "No person shall park or leave standing any vehicle, whether attended or unattended, upon the paved or improved or main traveled portion of any highway, outside of a business or residence district, when it is practicable to park or leave such vehicle standing off the paved or improved or main traveled portion of such highway; * * *."

In the instant case the trial court instructed the jury in substance as follows: After defendant Melia realized the transport was stalled, it became his duty to exercise ordinary care to avoid, as much as circumstances would reasonably permit, stopping upon the paved or main or traveled portion of the highway, and if reasonably possible, the blocking of either traffic lane in a manner that would create a traffic hazard. However, if the conditions were such that it would appear to a reasonably prudent person that it was impracticable to drive the transport off the paved portion of the highway, then the defendant Melia would not be negligent for stopping where he did.

We believe the evidence shows that while the shoulder of the highway was wide enough to have accommodated the transport by parking thereon it was covered with 6 inches of clay underneath which was a light-colored soil; that it was wet and muddy; that the patrolman had difficulty, because it was soft and muddy, in getting his 3,200 pound vehicle off the shoulder after he had parked thereon; and that no person who came upon the scene of the accident, with the exception of the patrolman, parked off the paved portion of the highway. Because of the condition of the shoulder of the highway it would have been impracticable to endeavor to park the transport which weighed 57,403 pounds thereon.

We think the evidence shows that Melia did what any reasonable, prudent person would ordinarily have done under the circumstances and nothing that a person would not have done. We find, as a matter of law, there is no evidence of conduct on the part of the appellant Melia upon which a jury could have found that he was negligent, and the trial court committed prejudicial error.

With reference to assignment of error (c) above, which issue was presented to the jury and the appellants requested the same to be withdrawn from the consideration of the jury, it is the appellants' contention that the affirmative evidence shows that nine witnesses, seven of whom were completely disinterested, testified that they saw flares around the stalled transport immediately before or immediately after the collision and that the negative evidence of the appellee's father and four other witnesses who testified they did not see the flares, did not create a fact question for the jury for the reason that these witnesses did not arrive at the scene of the accident until some time after the collision.

We believe that the appellants, in their argument, fail to make the vital distinction between testimony which is negative in form and that which is negative in character. Evidence is positive in character where the witness states that a certain thing did or did not happen to exist, and negative in character where the witness states that he did not see or know of the happening or existence of a circumstance or fact. See, 31 C. J. S., Evidence, § 2, p. 506; In re Estate of Woodward, 147 Neb. 270, 23 N. W. 2d 75; 32 C. J. S., Evidence, § 1037, p. 1079.

In the instant case there was testimony on the part of the appellee by four witnesses, which was in opposition to the testimony of witnesses of the appellants, that they looked and saw no flares. We make reference to the testimony heretofore set out. The court instructed with reference to the duties required in setting out flares, the distance that the same should be set out, and other duties governing such a situation. There is evidence to

the effect that the flares may not have been properly set out as required by the laws of this state. We believe it is within the province of the jury to believe or disbelieve the various witnesses on this subject and to resolve this conflict in the evidence, and that the trial court did not err as contended for by the appellants.

With reference to assignment of error (d) above, the trial court submitted such issue to the jury and the appellants requested the same to be withdrawn from the consideration of the jury, it is the appellants' contention that the testimony disclosed that every witness passing the stalled transport truck prior to the collision, first noticed the lights blinking.

The trial court instructed the jury that the evidence was insufficient as a matter of law to prove that the transport truck was not equipped with lighted clearance and taillights, and that the jury could not find them negligent in that respect.

The appellants further contend that the weight of the evidence established that three reflector flares were properly placed around the transport at the time of the collision. We have previously determined the question with reference to the flares.

It is the appellants' further contention that in view of the settled rule, it was reversible error for the trial court to include in its instructions allegations of fact found in the pleadings which had not been supported by the evidence, citing Allen v. Clark, 148 Neb. 627, 28 N. W. 2d 439, and McClelland v. Interstate Transit Lines, 139 Neb. 146, 296 N. W. 757.

We believe there is evidence to the effect that there might have been inadequacy of the warning to travelers as to whether or not lights on the truck, when blinked, were adequate and sufficient warning, and whether or not the lights were dirty so that they did not reflect a sufficient distance back. Under the circumstances as appear by the evidence, the trial court did not err in submitting this issue to the jury.

The appellants predicate error on the part of the trial court in instructing the jury as appears in instruction No. 11 as follows: "In addition to said statutory requirements, it was also the duty of the defendant Melia to obey the following rules of conduct: It was his duty to exercise ordinary care under the circumstances, commensurate with dangers reasonable to be anticipated, and to avoid an accident, if possible."

The appellants further contend that by this instruction the trial court advised the jury that Melia had two duties: (1) To exercise ordinary care, and (2) to avoid an accident if possible; that since the duties are set out in separate and independent clauses joined by the conjunction "and", it is clear that the first duty did not in any way modify or delimit the second duty, and it is also clear that the instruction left the jury free to find Melia negligent for failing to comply with the second duty even though he had fully complied with the first.

We believe that 60 C. J. S., Motor Vehicles, § 247, p. 604, is applicable: "The operator of an automobile, * * * is not an insurer against injury to persons or property; his duty in the absence of a statute providing otherwise is merely to exercise reasonable or ordinary care, that is, the degree of care and caution which an ordinarily prudent person would exercise under similar circumstances. Ordinary prudence requires a driver to seek to avoid a likely or threatened collision, even though this may involve waiver of his right of way, and the danger may have arisen through another's fault."

This instruction indicates that it was the duty of the appellant Melia to avoid a collision under all circumstances. He was not required to have such complete control of the truck as could prevent a collision by anticipation of negligence or illegel disregard of traffic regulations, and this instruction on this issue placed too great a duty upon the appellant. See Ficke v. Gibson, 153 Neb. 478, 45 N. W. 2d 436.

In the instant case the trial court committed prejudi-

cial error, and this error is not cured by considering all of the instructions as a whole to determine whether or not they properly and fairly present the issues. We conclude that the trial court committed prejudicial error in the giving of this part of the instruction.

The appellants contend the trial court erred in rejecting certain testimony of the defendant Clifton with reference to a conversation alleged to have been had with the decedent about decedent's conduct prior to and at the time of the accident. The trial court sustained objections that such testimony was in violation of section 25-1202, R. R. S. 1943, commonly referred to as the "dead man's statute." In the present state of the record, the trial court did not err as contended for by the appellants.

The appellants contend that the trial court erred in overruling their motion for directed verdict at the conclusion of the appellee's case, which motion was renewed at the conclusion of all of the evidence of the parties, for the reason that the evidence conclusively established that the sole and proximate cause of the collision was the negligence of the defendant Clifton.

From the evidence adduced, we do not believe that this case comes within the rule announced in Roth v. Blomquist, 117 Neb. 444, 220 N. W. 572, 58 A. L. R. 1473, as follows: "As a general rule it is negligence as a matter of law for a motorist to drive an automobile so fast on a highway at night that he cannot stop in time to avoid a collision with an object within the area lighted by his lamps."

We believe there is evidence appearing in the record sufficient to bring this case within the rule announced in Haight v. Nelson, 157 Neb. 341, 59 N. W. 2d 576: "'* * * we have made exception to this general rule when the nature of the object or its condition, such as color, dirt, et cetera, in relation to the highway or road, affected its immediate visibility or when, * * * the driver's attention is distracted or his vision impaired

and his opportunity for immediate discernment thereby affected. In such cases we have held that the issue of the driver's negligence, if any, and the degree thereof is for the jury.' " In the present state of the record a jury question is presented on this issue.

There are other assignments of error which, in the light of our conclusions, need not be discussed.

For the reasons given in this opinion the judgment entered on the verdict is reversed and the cause remanded for new trial.

REVERSED AND REMANDED.

MARTIN L. GABLE, APPELLEE, V. THE PATHFINDER IRRIGATION DISTRICT, APPELLANT.

68 N. W. 2d 500

Filed February 18, 1955. No. 33627.

1. **Trial.** For the purpose of decision on a motion for directed verdict the motion must be treated as an admission of the truth of all material and relevant evidence submitted on behalf of the party against whom it is directed, and such party is entitled to have every controverted fact resolved in his favor and to have the benefit of every inference that can reasonably be deduced from the facts in evidence.
2. **Waters: Negligence.** It is the duty of one who constructs an artificial drain with structures therein changing the natural flow of surface water to use reasonable care to maintain it or them so that water will not be collected and thrown on another to his damage.
3. ———: ———. In an action for damages for the flooding of lands where it appears that the flooding was caused in part by an act of God and in part by negligence the party guilty of negligence may be held only for that part which resulted from the negligence.
4. **Trial.** The instructions of the trial court should be confined to the issues raised by the pleadings and the facts developed by the evidence in support of the issues or admitted at bar.
5. **Pleading: Damages.** The office of the ad damnum in a pleading is to fix the amount beyond which a party may not recover on the trial of the action.

6. **Pleading.** As a general rule an amendment may be made to a pleading at any stage of the proceedings which does not change the quantum of proof as to a material fact.
7. **Damages: Crops.** The measure of damages to growing crops destroyed by the wrongful act or omission of another is the value at the time of destruction.
8. ———: ———. The measure of damages where a crop is injured but not rendered entirely worthless as a result of acts or omissions of another is the difference between the value at maturity of the probable crop if there had been no injury and the value of the actual crop at the time injured less the expense of fitting for market that portion of the probable crop which was prevented from maturing.
9. ———: ———. In determining the damage to farm products consideration should be given to the circumstances which conditioned the probability or improbability of the maturing of the crops in the absence of injury, and all other facts and circumstances tending to establish such value, which would properly include those arising before, at the time of, and after injury.

APPEAL from the district court for Scotts Bluff County: CLAIBOURNE G. PERRY, JUDGE. *Reversed and remanded.*

Herman & Van Steenberg, for appellant.

Mothersead, Wright & Simmons, for appellee.

Heard before CARTER, MESSMORE, YEAGER, CHAPPELL, WENKE, and BOSLAUGH, JJ.

YEAGER, J.

This is an action for damages by Martin L. Gable, plaintiff and appellee, against The Pathfinder Irrigation District, defendant and appellant.

The action was tried to a jury at the conclusion of which a verdict was returned in favor of the plaintiff for $3,925. Judgment was rendered on the verdict. An alternative motion for new trial or for judgment notwithstanding the verdict was filed and overruled. From the judgment and the order overruling the motion the defendant has appealed. The defendant in its brief has set forth eight assignments of error as grounds for reversal. Attention will be directed to these assignments or such of them as require consideration later herein.

In order to understand to what they refer and to reach an appropriate determination it becomes necessary to state what is presented by the pleadings.

The cause of action, as it appears from the pleadings and evidence, substantially is that the plaintiff is the owner of the southwest quarter of Section 34, Township 23 North, Range 54, West of the 6th P. M., Scotts Bluff County, Nebraska; that a line of railroad tracks runs generally north and south through the tract of land on a line a short distance east of the west line; that along the east side of the track and paralleling the track the entire distance across plaintiff's land is a ditch; that the flow of water in this ditch is from north to south; that the slope or fall of plaintiff's land is from north to south; that the defendant is an irrigation district and this is a part of the irrigation system of defendant; that on and prior to June 6, 1953, the defendant maintained a crossing over the ditch for the use of plaintiff; that this crossing was about one-fourth the distance across the tract south of the north line thereof; that the crossing consisted of a 30-inch pipe which was placed in the ditch and was covered with earth; that on June 6, 1953, by reason of heavy rains to the north a volume of water larger than the pipe was able to carry came down the ditch and washed out the crossing; that thereafter the defendant negligently replaced the pipe and the crossing and in so doing removed the east bank of the ditch above and to the north of the crossing; that the earth removed was used to replace the crossing; and that on June 13, 1953, a heavy rain came and a large volume of water came from the north which by reason of the negligence of defendant in replacing the pipe and the crossing and the removal of the dirt from the east bank of the ditch caused the water to back up and run over the east bank where the dirt had been removed in large volume on and across the land of plaintiff in a southeasterly direction, thus causing damage to the land and destroying and damaging crops which were growing thereon.

To the extent necessary to set forth herein the defendant in its pleaded defense, in substance, denied that it constructed and maintained the ditch in question as a part of its irrigation system. It said that it did some digging which was for the sole benefit of plaintiff; that at the crossing in question it placed a 36-inch instead of a 30-inch pipe; that on June 14, 1953, a heavy rainfall in flood proportions fell on plaintiff's lands and lands to the north which came down through the ditch and that the water therefrom flowed to the south and southeast following the natural fall and drainage over and across plaintiff's land; that the flow was sudden and unprecedented and an act of God; and that any damage to plaintiff's land and crops was not the result of negligence on the part of the defendant.

The second and third assignments of error relate particularly to the question of whether or not plaintiff's evidence is sufficient to sustain the charge that the defendant was negligent as charged and whether or not plaintiff has sustained damage which is compensable under the facts and law.

The material evidence of plaintiff in this respect, briefly but sufficiently summarized, we think, is that plaintiff is the owner of the quarter section of land in question; that this land is crossed from north to south by a line of railroad; that the natural direction of flow of water is from the north of this land generally south and southeast; that the lowest path or valley from the north and south line across it is to the east of and not on the railroad right-of-way; that at a time not exactly determinable, but quite a number of years ago, a ditch was constructed on the east side of the railroad track; that it extended from some point north of plaintiff's land south through or almost through plaintiff's land; that the defendant has a dike or earthen fill 12 to 15 feet high, that is, that high above plaintiff's land, along the north edge of plaintiff's land and across the ditch in question here on which an irrigation lateral is carried;

that water coming from the north in the ditch was formerly carried under the dike by a pipe but at the time in question here it was carried by flume; that the ditch was maintained by the defendant; that over the years three crossings had been constructed over the ditch by the defendant to furnish access by plaintiff to his land, one of which was about one-fourth the distance across the land from the north line, one about half the distance, and the third near the south line; that the second had been removed; that the first, which is the one of importance in this litigation, consisted of a tube or pipe placed with its lowest part below the bottom of the ditch which was covered with earth; that prior to June 13, 1953, water coming from the north passed down the ditch thence to a natural drainage below and did not spread out over plaintiff's land; that on June 6, 1953, there was heavy rainfall which the tube or pipe at the crossing was insufficient to carry in consequence of which the fill at the crossing was washed out; that at that time the water did not pass out over plaintiff's land but all of it flowed on down the ditch through plaintiff's land; that thereafter the defendant replaced the tube or tile in the crossing and re-covered it with earth; that the crossing was raised to a higher elevation than it had been previously and that the earth used for this purpose was taken from that portion of the east bank of the ditch which was between the dike and the crossing, one effect of which was to lower that part of the bank below the west bank, the crossing, and of course below the dike; that on June 14, 1953, there was another heavy rainfall causing water to come down the ditch from the north; that the tube was insufficient to carry the water under the crossing; that except for negligent construction of the crossing the ditch would have been sufficient to carry the water; and that this construction of the crossing and the removal of the east bank of the ditch caused the water to flow out over plaintiff's land and sugar beets damaging the land and the beets. It should be said additionally

that plaintiff's evidence in chief is in effect that no water came onto his land except that which came down the ditch and that which fell thereon. In rebuttal he testified that a small amount of water ran over and out of the irrigation lateral which was atop the dike but that no water came over from any other source.

This evidence, the defendant urges, was insufficient upon which to submit the question of negligence and damage to a jury. The question was presented to the district court by motion for directed verdict at the conclusion of plaintiff's evidence in chief and at the conclusion of all of the evidence.

The evidence of the defendant is contradictory of that of the plaintiff, but weight of evidence on the proposition being considered is not of concern.

For the purpose of a decision on a motion for directed verdict the motion must be treated as an admission of the truth of all material and relevant evidence submitted on behalf of the party against whom it is directed, and such party is entitled to have every controverted fact resolved in his favor and to have the benefit of every inference that can reasonably be deduced from the facts in evidence. Moncrief v. Interstate Transit Lines, 129 Neb. 168, 261 N. W. 163; Davis v. Spindler, 156 Neb. 276, 56 N. W. 2d 107; Fuss v. Williamson, *ante* p. 525, 68 N. W. 2d 139.

The summary of plaintiff's evidence is to say that the defendant constructed and maintained an artificial drainage ditch and structures therein, which changed the natural flow of surface water, without reasonable care and in such manner that water was collected and thrown upon the land of plaintiff to his damage.

If this was true, and for the purposes of this review it must be so accepted, then it must be said that there was evidence of actionable negligence and damage.

It is the duty of one who constructs an artificial drain with structures therein changing the natural flow of surface water to use reasonable care to maintain it or them

so that water will not be collected and thrown on another to his damage. City of McCook v. McAdams, on second rehearing, 76 Neb. 11, 114 N. W. 596; Webb v. Platte Valley P. P. & Irr. Dist., 146 Neb. 61, 18 N. W. 2d 563; Faught v. Dawson County Irr. Co., 146 Neb. 274, 19 N. W. 2d 358; Purdy v. County of Madison, 156 Neb. 212, 55 N. W. 2d 617; Ricenbaw v. Kraus, 157 Neb. 723, 61 N. W. 2d 350.

On the question of reasonable care, which is an element of the rule, it may be said that from the evidence of knowledge that the pipe under the crossing was insufficient to carry the water coming down the ditch and the evidence that the protective bank above the crossing was removed that it was inferable that the defendant failed to use reasonable care in the construction and maintenance of the ditch and the structure therein.

The evidence of plaintiff was sufficient, as pointed out in the summary of evidence, to permit a finding that the water of which complaint is made would not have flowed as it did and would not have damaged plaintiff's land and crops except for the negligence of the defendant.

It must be said therefore that the court did not err in overruling the defendant's motions for a directed verdict.

In its first assignment of error the defendant says that the court erred in assuming in instructions that the defendant owed a duty to plaintiff to keep run-off surface water off of plaintiff's land.

To what that assignment has reference is not made clear. Attention is not, in argument, directed to any instruction wherein it is contended that this is true, and our examination of the instructions discloses no support for the contention. The court on this phase of the case appears to have fairly presented the respective contentions of the parties.

One of the defenses to the action was that the occurrence of which complaint is made by plaintiff was within the meaning of law an act of God and that because

thereof the defendant is not liable for any damage sustained by the plaintiff.

The sixth assignment of error is that the court's instructions given relative to this defense were erroneous. Particular complaint is made of instruction No. 8. In this instruction act of God is defined correctly. After the definition the following appears: "For a loss occasioned by an 'Act of God', the defendant is not liable provided its own negligence has not contributed to the damage." The attack upon this instruction appears to be that the court should have told the jury that in case of an act of God a defendant is not liable unless his negligence *contributed in a large degree* instead of *contributed* as was done by the instruction.

To sustain its position in this regard the defendant cites Republican Valley R. R. Co. v. Fink, 18 Neb. 89, 24 N. W. 691. This case lends no support. An instruction was given in that case containing the words in question which instruction was approved, but the particular words were not referred to in the approval. It was approved over objection of the appellant because, as the court said: "The instruction, therefore, was favorable to the railroad company, and it has no cause of complaint because it was given."

The effect of defendant's contention in this respect would be to say that before one may be required to respond in damages where damages flow in part from an act of God such one must have by his negligence contributed to the damage in a large degree. No legal principle sustains this viewpoint. The true rule, we think, is one set forth as the majority rule in annotation in 112 A. L. R. 1084. This rule is quoted in defendant's brief. It is the following: "In the majority of cases involving the flooding of lands in which it appeared that part of the waters doing the damage complained of were the result of an act of God and part were the result of defendant's negligent or wrongful acts, it has been held that defendant was liable only for the proportionate

amount of the damage caused by the waters attributable to his fault."

There was no error in instruction No. 8.

The effect of the fifth assignment of error is to say that the court erred by failure to require plaintiff to allocate the damages sustained by him as a result of the negligence of defendant and those not sustained thereby.

This contention appears to be without merit. The action of plaintiff was solely predicated upon negligence of the defendant. The defendant denied negligence and affirmatively pleaded that the entire damage resulted from an act of God. The case was tried on the theories pleaded by the parties alone. On these theories the jury was fully and fairly instructed.

In Ellis v. Union P. R. R. Co., 148 Neb. 515, 27 N. W. 2d 921, it was said by quotation from 53 Am. Jur., Trial, § 574, p. 452: " 'It is a well-settled general principle that the instructions given by the trial court should be confined to the issues raised by the pleadings in the case at bar and the facts developed by the evidence in support of those issues or admitted at the bar.' " See, also, Citizens Nat. Bank v. Sporn, 115 Neb. 875, 215 N. W. 120; Becks v. Schuster, 154 Neb. 360, 48 N. W. 2d 67; Perrine v. Hokser, 158 Neb. 190, 62 N. W. 2d 677.

At the close of plaintiff's case in chief he was allowed to amend the prayer of his petition by increasing the ad damnum from $3,500 to $5,750. The propriety of this was raised by the seventh assignment of error.

The office of the ad damnum in a pleading is to fix the amount beyond which a party may not recover on the trial of his action. Cole v. Hayes, 78 Me. 539, 7 A. 391; Karnuff v. Kelch, 69 N. J. Law 499, 55 A. 163; Vincent v. Mutual Reserve Fund Life Assn., 75 Conn. 650, 55 A. 177.

The general rule is that an amendment may be made to a pleading which does not change the issues nor affect the quantum of proof as to a material fact at any stage of the proceedings. Miller Rubber Products Co. v. Anderson, 123 Neb. 247, 242 N. W. 449; Robinson Out-

door Advertising Co. v. Wendelin Baking Co., 145 Neb. 112, 15 N. W. 2d 388.

No good reason is apparent why this rule should not apply to the ad damnum as well as any other part of a petition.

In this case the amendment changes no issue and neither did it affect any quantum of proof. The evidence of plaintiff designed to support the amendment had been adduced and no different burden rested on defendant thereafter which did not exist before. The assignment is without merit.

Assignment of error No. 8 challenges the propriety of evidence of plaintiff admitted on rebuttal. Without referring to the evidence specifically, we fail to see how it may be regarded other than rebuttal of testimony of the defendant. There was no error.

By the fourth assignment of error it is contended that the instruction on measure for the assessment of damages was in part incorrect.

The evidence indicates that some of the beets were entirely destroyed and some were only damaged. Under law there is a measure for the assessment of damages for crops destroyed and another where there has been damage but not destruction. The measure submitted for all damages to plaintiff was the one applicable alone to damage without complete destruction.

The measure of damages to growing crops destroyed by the wrongful act or omission of another is the value at the time of destruction. Pulliam v. Miller, 108 Neb. 442, 187 N. W. 925; Ricenbaw v. Kraus, *supra.*

The measure where a crop is injured but not rendered entirely worthless as a result of the acts or omissions of another is the difference between the value at maturity of the probable crop if there had been no injury and the value of the actual crop at the time injured less the expense of fitting for market that portion of the probable crop which was prevented from maturing. Hopper v. Elkhorn Valley Drainage District, 108 Neb.

550, 188 N. W. 239; Ricenbaw v. Kraus, *supra.*

The defendant urges that as to that portion which was destroyed the former of these two measures should have been applied under instructions.

This contention may not be sustained. There was no severance of these two phases in pleading or proof. The matter in issue was the total damage done to beets growing in a field on plaintiff's land. The rule as laid down in the cases cited under the second measure should be regarded as controlling here.

The next and last proposition to be considered is one which has been argued but not specifically presented by an assignment of error. It is thought however that it has been sufficiently presented under assignment No. 3, that is, that the verdict is not sustained by sufficient evidence and is contrary to law.

The point of this proposition is that there was no proper or competent evidence upon which to fix the amount of plaintiff's damage.

The rule as to the fixation of damage to growing crops is found in Hopper v. Elkhorn Valley Drainage Dist., *supra.* Paraphrased it is as follows: In determining the value of farm products of any year the jury should take into consideration the circumstances which conditioned the probability or improbability of the maturing of the crops in the absence of injury, and all other facts and circumstances shown by the evidence tending to establish such value, which would properly include those arising before, at the time of, and after the injury, for the purpose of arriving at the difference between the value of that crop before and after the injury.

As elements to be considered under the rule the court approved an instruction designating elements which should be considered, as follows: The kind of crops planted, the nature of the land, the kind of season, what crops according to the season the land would ordinarily yield, the state of the crops' growth when injured or destroyed, the average yield of similar land in the neigh-

borhood where a crop was cultivated in the same way and not injured, the market value of the crop injured and the market value of the reasonably probable crop without injury, the expense that would have been incurred after injury of fitting for market the portion of the crop the wrongful act prevented from maturing, the time of the injury, the circumstances which conditioned the probability or improbability of the maturing of the crops in the absence of injury, and all other facts and circumstances shown by the evidence tending to establish the value.

The item of marketing expense may be disregarded since it is true that this burden fell upon the tenant upon the land and not upon the plaintiff.

None of the named elements has any support in the evidence except that of the market value of the crop injured. The plaintiff in this respect has rested his case on his testimony as to the difference between the market value of the crop in its injured condition and what the value would have been if there had been no injury, based on a 10-year average of production on the land. It is true that he testified that the damage to beets was $2,500, but unequivocally he based this solely on a 10-year average of production on the land.

There is no purpose to say that there must be evidence on all of the elements proper to be considered as pointed out in Hopper v. Elkhorn Valley Drainage Dist., *supra,* but it must be said that sufficient of them must be proved to apprise the jury of the pertinent facts and circumstances relating to the particular year and the conditions which obtained at that time with reference to the subject matter. There is an absence of any such evidence.

In the light of the failure of proof in this respect the defendant is entitled to a new trial.

The judgment of the district court is reversed and the cause is remanded for a new trial.

REVERSED AND REMANDED.

JOSEPH BORS, JR., ET AL., APPELLEES, V. JAMES A. MCGOWAN ET AL., APPELLANTS.
68 N. W. 2d 596

Filed February 18, 1955. No. 33630.

1. **Appeal and Error.** A bill of exceptions duly allowed and certified by the trial judge imports absolute verity and its truthfulness cannot be assailed collaterally.
2. **Estoppel.** Generally when estoppel is relied upon facts constituting it must be pleaded. It cannot be shown under a general denial, and where a party pleads and relies on estoppel the burden of proof is upon him to establish the facts upon which the estoppel is based.
3. **Equity.** The defense of laches prevails only when it has become inequitable to enforce the claimant's right, and is not available to one who has caused or contributed to the cause of delay or to one who has had it within his power to terminate the action.
4. ———. It is the practice of courts of equity, when they once have obtained jurisdiction of a case, to administer all the relief which the nature of the case and the facts demand, and to bring such relief down to the close of the litigation between the parties.
5. **Estates: Easements.** By a single instrument of conveyance, there may be created an estate in land in one person and an easement in another.
6. **Easements.** The extent of an easement created by such a conveyance is fixed by the conveyance and the meaning thereof is to be found in its language construed in the light of relevant circumstances.
7. ———. The possessor of land subject to an easement created by conveyance is privileged to make such uses of the servient tenement as are not inconsistent with the provisions of the creating conveyance.
8. ———. In the absence of provisions to the contrary in a conveyance creating an easement, it will be assumed that the conveyee is given, as incidental to it, the privilege of so maintaining and repairing the premises subject to it as to enable him effectively to make the uses authorized by it, so long as he does not unreasonably interfere with the rights of the owner of the servient tenement.
9. ———. An easement is appurtenant to land when the easement is created to benefit and does benefit the possessor of the land in his use of the land.
10. **Deeds.** A reservation is always something taken back out of that which is demised, the creation by the grant of a new right in the grantor from the subject of the conveyance and some-

thing which did not exist as an independent right before the grant was made.

11. ———. An exception excludes from the operation of the conveyance a specified interest which existed as an independent right before the grant was made, and it remains in the grantor unaffected by the conveyance, without the necessity of including words of general inheritance.

APPEAL from the district court for York County: H. EMERSON KOKJER, JUDGE. *Affirmed.*

Sherman McKinley and *Hutchinson & Hurst,* for appellants.

Kirkpatrick & Dougherty, for appellees.

Gerald F. Beaver, amicus curiae.

Heard before SIMMONS, C. J., CARTER, MESSMORE, YEAGER, CHAPPELL, WENKE, and BOSLAUGH, JJ.

CHAPPELL, J.

Plaintiffs, Joseph Bors, Jr., and Jean Bors, his wife, brought this action in equity against defendants, James A. McGowan and Zita McGowan, his wife, seeking to enjoin them from interfering with plaintiffs' right of ingress and egress over a 16½ foot roadway extending east and west one-half mile across defendants' farm; to enjoin defendants from interfering with plaintiffs' right to repair and improve the roadway in order to permit travel over it in all kinds of weather; and to obtain general equitable relief. Defendants answered, denying generally but admitting that plaintiffs had a right-of-way over such roadway for ingress and egress purposes. However, defendants alleged that it was a private way, the use of which was limited to plaintiffs only, and denied plaintiffs' right to repair or improve it as they sought to do. Defendants also prayed for an injunction and general equitable relief. Plaintiffs' reply denying generally completed the issues.

After trial, judgment was rendered finding and adjudging the issues generally in favor of plaintiffs and

against defendants. It found and adjudged that on August 2, 1941, when plaintiffs deeded the east half of the northeast quarter and the northeast quarter of the southeast quarter of Section 36, Township 9 North, Range 3 West of the 6th P. M., in York County to defendant James A. McGowan, plaintiffs reserved the north 16½ feet of the northeast quarter of the southeast quarter as an easement for a roadway in order to connect improvements upon lands retained by plaintiffs with a public highway. It found that such easement was appurtenant to plaintiffs' retained lands and vested in them, their heirs, or assigns, and that its use was not limited personally to plaintiffs but might be used by them, their family, tenants, servants, agents, employees, guests, or any other person lawfully going to and from plaintiffs' improvements. It permanently enjoined defendants from preventing, interfering, molesting, or disturbing the rights of plaintiffs, their heirs, and assigns to the use and occupancy of such roadway. Further, it specifically provided: "That the defendants are further forever permanently enjoined from interfering or molesting the plaintiffs in building a grade and filling in the low spots in the road where waters are wont to run or stand; in the areas where the road runs through flat higher ground plaintiffs may grade enough to round up and put a low crown on the road so that the water will not collect and stand on it but the grade shall not be so high nor the ditches so deep in the flat higher areas so as to unreasonably interfere with the defendants rights to cross the road with his farm machinery.

"That the plaintiffs shall place culverts or other facilities for drainage whatever is necessary to permit the water to pass as nearly as is reasonably practicable in the manner and volume as exists by nature.

"That defendants shall be further permanently enjoined from interfering and molesting with the plaintiffs, their heirs, and assigns from improving said road by the use of gravel, black-top, rock, concrete or other similar

materials in improving said easement and said plaintiffs shall have the right to improve said roadway by the use of gravel, blacktop, rock, concrete or other similar materials.

"That the plaintiffs are permanently enjoined from trespassing upon the lands of the defendants but shall confine their use of the easement to the 16½′ strip of land expressly reserved to them in the deed dated August 2, 1941.

"It is further ordered, adjudged and decreed that the plaintiffs and defendants and each of them are hereby enjoined and restrained from doing any bodily harm, injury or threats to each other.

"All costs to be taxed to the defendants."

Defendants' motion for new trial was overruled and they appealed, setting forth numerous assignments, the effect of which was to claim that the judgment was not sustained by sufficient evidence but was contrary thereto and contrary to law. Upon trial de novo under elementary rules with relation thereto, we conclude that the assignments should not be sustained.

The record discloses that the material evidence is not in dispute. Plaintiff Joseph Bors, Jr., and defendant James A. McGowan are brothers-in-law. Such plaintiff's father owned 480 acres of land in Section 36. It was divided by deeds between plaintiff and his brother. Plaintiff thus owned 240 acres. On August 2, 1941, while the family relations were friendly, plaintiff, by warranty deed, conveyed the east 120 acres thereof to defendant James A. McGowan. Such deed provided in part: "The Grantors herein hereby reserve the right and use of the north 16½ feet of the northeast quarter of the southeast quarter (NE¼ SE¼) of the above described land for ingress and egress purposes. * * * And we do hereby covenant with the said Grantee and with his heirs and assigns, that we lawfully seized of said premises; that they are free from encumbrance except as above stated * * *."

A comparable roadway had concededly theretofore been in existence at the same location since about 1914 or at least many years before August 2, 1941. That fact was observed and well known to defendant grantee long before and at the time his deed was executed, when he suggested that such an easement should be placed in the deed. As a matter of fact, there is no other road from plaintiffs' improvements to a highway. It formerly connected with a county road on the east, but in 1943 such road was vacated, and prior to and at the time of the trial the roadway here involved connected with a short road over property belonging to the county, thence into Highway No. 81. Defendants' contention that such roadway did not connect with any recognized road or highway is not sustained by any competent evidence.

About a month after the deed was delivered both plaintiff Joseph Bors, Jr., and defendant James A. McGowan, working together, graded up the road, took out an old broken wooden culvert, and installed a new 16-inch steel culvert in its place at the then lowest spot in the roadway. They thereafter farmed the lands together for about 3 years. Subsequently, the family relations became strained and defendants contended that on April 1, 1944, plaintiff Joseph Bors, Jr., entered into a written agreement with defendants which settled all their difficulties, whereby plaintiff waived his claimed rights to the roadway. Such contention has no merit. In that connection, no such agreement was either pleaded or offered, referred to, or discussed in any manner in the bill of exceptions. True, defendants proposed its inclusion in the bill of exceptions together with certain related oral evidence as an amendment, but the trial court considered and denied the proposal. The bill of exceptions was duly allowed and certified by the trial court as containing: "* * * all of the evidence offered, and all of the evidence given, both oral and documentary, upon the trial of this cause, together with all oral motions, stipu-

lations, offers, objections and rulings of the Court thereon, * * * ." Such bill of exceptions does not disclose that defendants' proposed amendment was ever supported by any evidence adduced in the trial court. In such a situation, the rule is: "A bill of exceptions duly allowed and certified by the trial judge imports absolute verity and its truthfulness cannot be assailed collaterally." Gregory v. Kaar, 36 Neb. 533, 54 N. W. 859. See, also, First Trust Co. v. Glendale Realty Co., 125 Neb. 283, 250 N. W. 68.

At times both plaintiffs and defendants traveled over or along the roadway with their farm machinery. Of course, at all times, plaintiffs and other persons visiting or lawfully having business with plaintiffs had traveled or attempted to travel over the roadway to and from plaintiffs' improvements. By about 1946 the family relations had reached a stage of open hostility and physical violence. Also, the roadway had gradually degenerated, with its grade and shoulders washed out or blown away, or obliterated by traffic, snow, and water washing into or over and across it from defendants' land. In addition, defendant James A. McGowan once listed right on across the roadway, ploughing into it from both sides to and from his land. By that time and subsequently defendants openly refused to permit plaintiffs to improve it, claiming that it was a private way, traversable only by plaintiffs or their family, and began obstructing its use by plaintiffs and others lawfully traveling over it by threatening them with legal proceedings for trespass or to take the case into their own hands and inflict physical harm if they did so. A part of such time defendant James A. McGowan carried a loaded .22 rifle upon his farm equipment.

In July 1951, such defendant published a "LEGAL NOTICE" in the York Daily News-Times, reciting pertinent easement portions of his deed from plaintiffs and telling the public that: "The right-of-way thus created for the use of said grantors is a private way and not a

public highway and its use is hereby forbidden to all persons, except to the grantors named in said deed. JAMES A. McGOWAN, Owner."

By that time and subsequently until the filing of plaintiffs' action and the trial thereof, the roadway, composed of Hastings silt, became and was impassable by motor vehicles except in low gear, with the use of chains or mud tires. Photographs graphically demonstrate that it was generally low and covered with deep ruts, ditches, and holes which filled with water or snow when it fell, leaving the road practically impassable.

Defendants claimed that to permit plaintiffs to improve the roadway as sought would interfere with their irrigation and farming on each side of the roadway. With regard to the latter contention, the judgment of the trial court appropriately and adequately protected defendants by providing that the improvements should be made in such manner that would not "unreasonably interfere with defendants rights to cross the road with his farm machinery." With regard to the first contention, the record discloses that defendants' land drained generally from the south and their irrigation water was siphoned from the south and east across the roadway through a culvert. To improve the roadway as sought would not interfere in any manner with defendants' irrigation. Neither of such contentions has any merit.

Defendants argued that plaintiffs' voluntary conduct precluded assertion of their rights by reason of equitable estoppel. In that regard, as early as Carnahan v. Brewster, 2 Neb. (Unoff.) 366, 96 N. W. 590, this court adhered to the general rule that: "When an estoppel is relied on it must be pleaded." Also, in Hughes Co. v. Farmers Union Produce Co., 110 Neb. 736, 194 N. W. 872, 37 A. L. R. 1314, we held: "In order to let in evidence of an estoppel in pais, the facts constituting the same must be pleaded; such an estoppel cannot be shown under a general denial." See, also, Annotation, 120 A. L. R. 8, citing innumerable authorities from this and

other jurisdictions. Further, in Parkins v. Missouri P. Ry. Co., 76 Neb. 242, 107 N. W. 260, reaffirmed in State v. Cheyenne County, 123 Neb. 1, 241 N. W. 747, and Wright v. Loup River Public Power Dist., 133 Neb. 715, 277 N. W. 53, this court held: "Where a party pleads and relies on an estoppel, the burden of proof is upon him to establish the facts upon which the estoppel is based." It is sufficient for us to say that defendants neither pleaded nor proved any facts which would permit the application of the doctrine of estoppel precluding the assertion of plaintiffs' rights. Defendants' contention in that regard has no merit.

Defendants also contended that laches of plaintiffs precluded them from asserting their rights, since their delay in prosecuting this action prejudiced defendants. In Miller v. Miller, 153 Neb. 890, 46 N. W. 2d 618, this court held: "The defense of laches prevails only when it has become inequitable to enforce the claimant's right, and is not available to one who has caused or contributed to the cause of delay or to one who has had it within his power to terminate the action.

"Where the obligation is clear, and its essential character has not been affected by the lapse of time, equity will enforce a claim of long standing as readily as one of recent origin; certainly, as between the immediate parties to the transaction." See, also, Richards v. Hatfield, 40 Neb. 879, 59 N. W. 777; Schurman v. Pegau, 136 Neb. 628, 286 N. W. 921.

Further, in 21 C. J., Equity, § 221, p. 226, it is said: "If the duty or obligation sought to be enforced is continuing in its character, time runs against plaintiff, not from its creation, but from its repudiation or breach, and continuing breaches create constantly fresh rights of suit, at least where plaintiff's conduct has been such as to forbid an inference of acquiescence." See, also, 30 C. J. S., Equity, § 116, p. 537. In the light of the evidence heretofore set forth and such rules, we conclude that defendants' contention with regard to laches has no merit.

Defendants contended that the judgment did not conform to the allegations and prayer of plaintiffs' petition or the evidence in support thereof. They referred particularly to that part of the judgment which permitted plaintiffs to place culverts or other facilities for drainage wherever necessary and to improve the surface of the roadway with gravel, blacktop, rock, concrete, or other similar materials.

In that connection, this court held in Herrin v. Johnson Cashway Lumber Co., 153 Neb. 693, 46 N. W. 2d 111: "It is the practice of courts of equity, when they once have obtained jurisdiction of a case, to administer all the relief which the nature of the case and the facts demand, and to bring such relief down to the close of the litigation between the parties." Such rule has application here. Plaintiffs' petition appropriately alleged facts with relation to the location, contour, and almost impassable condition of the roadway; that the single culvert theretofore installed was inadequate and defendants had refused to permit plaintiffs to underlay the roadway with sufficient and adequate culverts necessary to carry off the accumulations of water descending upon it from the south and had refused to permit plaintiffs to improve the surface of the road for the purpose of making it an all-winter and weather road. Their prayer was for a declaration that they had a right to do so and to enjoin defendants from preventing it. Defendants' answer denied that plaintiffs had any right under the language in the deed to install culverts or to build ditches and construct an all-weather road, and they prayed for a declaration that plaintiffs had no such rights. In such a situation, the evidence and law amply supported and sustained plaintiffs' allegations as found by the trial court, and defendants' contention has no merit. Also, contrary to defendants' contention, the language of the judgment defining the rights of the parties and granting injunctive relief was clear, specific, and unequivocal, so that the parties could not be misled thereby.

We come finally to the law relating to the nature of the easement and plaintiffs' rights thereunder, bearing in mind the respective contentions made by the parties with relation thereto, as heretofore set forth. In the light of the evidence heretofore recited and the following rules of law which are applicable and controlling, the judgment of the trial court was proper in every material respect.

In Restatement, Property, § 472, p. 2966, it is said: "By a single instrument of conveyance, there may be created an estate in land in one person and an easement in another." See, also, 17 Am. Jur., Easements, § 29, p. 942. Further, the extent of an easement created by such a conveyance is fixed by the conveyance and the meaning thereof is to be found in its language construed in the light of relevant circumstances. Restatement, Property, § 482, p. 3009, § 483, p. 3010.

As stated in Restatement, Property, § 486, p. 3027: "The possessor of land subject to an easement created by conveyance is privileged to make such uses of the servient tenement as are not inconsistent with the provisions of the creating conveyance." Also, as said in 28 C. J. S., Easements, § 90, p. 769: "While a private way may not be used by the general public, it may be used by the owner of the way, his family, tenants, servants, and guests, as well as by persons transacting business with him, in the absence of a special agreement to the contrary."

In Restatement, Property, § 485, p. 3023, it is said: "In the case of an easement created by conveyance, the existence and the extent of any privilege and any duty of the owner of the easement to maintain, repair and improve the condition of the servient tenement for the purpose of increasing the effective uses of the easement or protecting the interests of the possessor of the servient tenement are determined by the conveyance." Further, comment c, p. 3025, says: "In the absence of provisions to the contrary in a conveyance creating an

easement, it will be assumed that the conveyee is given, as incidental to it, the privilege of so maintaining and repairing the premises subject to it as to enable him effectively to make the uses authorized by it. This privilege to maintain and repair is subject in turn to the limitation that the privilege must be exercised in a reasonable manner. To maintain and repair in a reasonable manner means that due account must be taken of the needs of the possessor of the servient tenement." Also, in 17 Am. Jur., Easements, § 111, p. 1005, referring to the owner of an easement, it is said: "The latter may make the way as useable as possible for the purpose of the right owned so long as he does not increase the burden on the servient tenement or unreasonably interfere with the rights of the owner thereof. The right of the owner of an easement of way to make repairs exists without question where the way is impassable and useless without repairs. It has been held that the grantee of an easement may prepare the way for proper use and, hence, may grade, gravel, plough, or pave such way. He may depress the grade of the way so as to make it accessible to a public highway with which it connects." See, also, Guillet v. Livernois, 297 Mass. 337, 8 N. E. 2d 921, 112 A. L. R. 1300, and annotation thereto, citing innumerable authorities.

As said in Restatement, Property, § 453, p. 2914: "An easement is appurtenant to land when the easement is created to benefit and does benefit the possessor of the land in his use of the land." As held in Neilson v. Leach, 140 Neb. 764, 1 N. W. 2d 822: "'Whether an easement in a given case is appurtenant or in gross is to be determined mainly by the nature of the right and the intention of the parties creating it. If it be in its nature an appropriate and useful adjunct of the land conveyed, having in view the intention of the grantee as to its use, and there being nothing to show that the parties intended it to be a mere personal right, it will be held to be an easement appurtenant to the land, and

not an easement in gross.' Smith v. Garbe, 86 Neb. 91, 124 N. W. 921." See, also, 17 Am. Jur., Easements, § 10, p. 929.

Also, as said in Restatement, Property, § 473, p. 2967: "When, by a conveyance inter vivos of an estate in land, there is created in favor of a conveyor, by the language of the conveyance, an easement in the land conveyed authorizing a use of that land as could have been made by the conveyor as owner of it, the duration of the easement is determined by the particular language used construed in the light of the circumstances under which the conveyance was made." Also in that connection, as noted in Restatement, Property, § 473, comment a, p. 2971, American courts now generally hold in such situations: "* * * that words of inheritance, though otherwise required, could be dispensed with in the reservation of an easement authorizing a use corresponding to a previous use of his land made by the conveyor if such previous use was made apparent by the physical condition of the land. This holding was placed upon the ground that the privilege of use thus created was, in the hands of the conveyor, prior to a conveyance, a 'quasi-easement,' something already in existence, and, as such, could be 'created' in the manner of an exception rather than in the manner of a reservation. * * * This means that the owner of land who is conveying corporeal interests may retain part of his corporeal interests as incorporeal interests. By his own act, he changes the nature of his interests at the same time that he retains them. Accordingly technical words of creation are unnecessary in the creation of easements of this character." Also, in comment b, p. 2972, it is said: "Easements coming within the rule stated by this Section consist of privileges retained by a conveyor corresponding to privileges which he might have exercised as owner prior to his conveyance."

As recently as Elrod v. Heirs, Devisees, etc., 156 Neb. 269, 55 N. W. 2d 673, we held: "A reservation is always

something taken back out of that which is demised, the creation by the grant of a new right in the grantor from the subject of the conveyance and something which did not exist as an independent right before the grant was made.

"An exception excludes from the operation of the conveyance the interest specified and it remains in the grantor unaffected by the conveyance.

"The legal terms exception and reservation although strictly distinguishable are frequently used interchangeably and indiscriminately. The use of either term is not conclusive and many times is not even significant as to the intention of the parties to the instrument where used or the nature of the provision in which the term appears." In that opinion we quoted with approval and applied Restatement, Property, § 27, p. 80, which says: "The requirement stated in this Section as to the inclusion of words of general inheritance with respect to the conveyee has no application to an exception. The effect of an exception is to exclude from the operation of the conveyance the interest specified and it remains in the conveyor unaffected by the conveyance."

For reasons heretofore stated, we conclude that the judgment of the trial court should be and hereby is affirmed. All costs are taxed to defendants.

AFFIRMED.

DAVID HYSLOP, PLAINTIFF IN ERROR, V. STATE OF NEBRASKA, DEFENDANT IN ERROR.

68 N. W. 2d 698

Filed February 18, 1955. No. 33649.

1. **Appeal and Error.** Affidavits used as evidence on the hearing of an issue of fact must be offered in evidence in the trial court and embodied in a bill of exceptions to be available to plaintiff in error in this court.
2. **New Trial.** Generally a new trial will be granted when a ver-

dict is received in the absence of the judge, or of accused and his sole counsel, unless the irregularity is waived.

3. **Criminal Law: Trial.** Where the record in a criminal prosecution discloses that the defendant was present during the trial, but is silent as to whether he was present when the verdict was received, it will be presumed that the verdict was properly received and that the defendant was present in court at the time.
4. ———: ———. Verdicts in criminal cases should be certain and import a definite meaning free from ambiguity. However, if the meaning of the verdict in the light of the whole record is clear, beyond any reasonable doubt, it is sufficient.
5. **Criminal Law: Judges.** Trial judges are charged with the duty of conducting criminal trials in such a manner that the accused may have a fair and impartial trial uninfluenced by prejudice, passion, and public clamor.
6. **Trial: Appeal and Error.** Unless the record discloses an objection or an exception to remarks of a trial judge a complaint with regard thereto cannot be reviewed on appeal.
7. **Criminal Law: Appeal and Error.** It is mandatory that alleged errors occurring in the trial of a criminal case must be pointed out in the motion for a new trial, the petition in error, and the assignments of error in the brief of defendant.
8. **Continuances: Criminal Law.** An application for postponement of time of trial of a criminal case is addressed to the sound discretion of the trial court and, in the absence of abuse of discretion disclosed by the record, a denial thereof is not error.
9. **Criminal Law.** Where the punishment of an offense created by statute is left to the discretion of a court, to be exercised within certain prescribed limits, a sentence imposed within such limits will not be disturbed unless there appears to be an abuse of such discretion.

ERROR to the district court for Hall County: ERNEST G. KROGER, JUDGE. *Affirmed.*

Lloyd W. Kelly and *Lloyd W. Kelly, Jr.*, for plaintiff in error.

Clarence S. Beck, Attorney General, and *Ralph D. Nelson*, for defendant in error.

Heard before SIMMONS, C. J., CARTER, MESSMORE, YEAGER, CHAPPELL, WENKE, and BOSLAUGH, JJ.

WENKE, J.

This is an error proceeding from the district court

for Hall County. In the district court for Hall County a jury found plaintiff in error, David Hyslop, guilty of operating his motor vehicle upon a public highway of that county at a rate of speed in excess of 60 miles an hour, which is in violation of the provisions of section 39-723, R. R. S. 1943. His motion for new trial having been overruled and a sentence of 30 days in jail imposed, plaintiff in error instituted this proceeding to review the record of his conviction. For convenience we shall herein refer to the plaintiff in error as defendant.

Ervin C. Molcyk, a member of the Nebraska Safety Patrol, arrested the defendant about 4:30 p. m. on January 19, 1954, in Hall County. He testified that immediately preceding defendant's arrest he followed defendant's car, which was being driven by defendant, for a considerable distance along U. S. Highway No. 30; that defendant then turned his car off U. S. Highway No. 30 onto a county road; that the county road is in Hall County; that he followed the defendant's car on this county road; and that for at least three-fourths of a mile it was driven by defendant at the rate of 75 miles an hour. There can be no question as to the sufficiency of the evidence to sustain the conviction.

Defendant raises several questions which he seeks to support by information contained in affidavits and a telegram. These affidavits and telegram are found in the transcript and not in the bill of exceptions. In this situation the following is applicable: "Affidavits used as evidence on the hearing of an issue of fact must be offered in evidence in the trial court and embodied in a bill of exceptions to be available to plaintiff in error in this court." Darlington v. State, 153 Neb. 274, 44 N. W. 2d 468. See, also, Mulder v. State, 152 Neb. 795, 42 N. W. 2d 858.

Consequently we will not discuss any facts contained in these affidavits and the telegram.

Defendant contends it was reversible error for the jury to return its verdict and be dismissed without de-

fendant or his attorney being present. 23 C. J. S., Criminal Law, § 1450, p. 1214, states the general rule in this regard as follows: "Generally a new trial will be granted when a verdict is received in the absence of the judge, or of accused and his sole counsel, unless the irregularity is waived." See, also, § 29-2024, R. R. S. 1943; Longfellow v. State, 10 Neb. 105, 4 N. W. 420.

The record of the proceedings had on May 17, 1954, includes the following: "Oral arguments made, jury instructed in writing and at 2:20 P. M. jury retired in charge of sworn officer; At 4:40 P. M. jury returned into court with a verdict which was filed and read to the jury and they announced that it was their unanimous verdict. Verdict finds defendant guilty as charged. Jury discharged."

We held in Darlington v. State, *supra*: "All presumptions exist in favor of the regularity and correctness of the orders and judgments of courts of general jurisdiction, and he who asserts the contrary is required to establish the alleged defect or error by an exhibition of the record. Salistean v. State, 115 Neb.. 838, 215 N. W. 107, 53 A. L. R. 1057; Wright v. State, supra."

We have often said: "Where the record in a criminal prosecution discloses that the defendant was present during the trial, but is silent as to whether he was present when the verdict was received, it will be presumed that the verdict was properly received and that the defendant was present in court at the time." Feddern v. State, 79 Neb. 651, 113 N. W. 127.

As early as Folden v. State, 13 Neb. 328, 14 N. W. 412, we said: "Where the record once shows the presence of the prisoner at his trial, it will be presumed to have continued to the end unless the contrary is affirmatively shown. The presumption is, rather, that the trial court did its duty, than that it did not. We see no error in the record that calls for a new trial, and the judgment must be affirmed." See, also, Bolln v. State, 51 Neb. 581, 71 N. W. 444.

The contrary is not here affirmatively shown.

As to the waiver of such right in a misdemeanor case, see § 29-2001, R. R. S. 1943; Scott v. State, 113 Neb. 657, 204 N. W. 381; Peterson v. State, 64 Neb. 875, 90 N. W. 964; State v. Waymire, 52 Or. 281, 97 P. 46, 132 Am. S. R. 699, 21 L. R. A. N. S. 56; Annotation, 100 A. L. R. 486.

As stated in State v. Waymire, *supra*: "The right, however, is conferred upon him for his own protection and benefit, and, like many other rights accorded him by law, may be waived, either expressly or impliedly; and by the weight of authority, when a defendant charged with a misdemeanor is on bail, and is present either in person or by his counsel at the commencement of and during the trial, until the cause is submitted to the jury, and afterwards voluntarily departs from the court before its adjournment and without leave, he will be deemed to have waived the right to be present on the rendition of the verdict, and it may be legally received in his absence. 12 Cyc. 528; 22 Enc. Pl. & Pr. 929. Indeed, many of the courts hold that this rule will apply in a trial for a felony. Frey v. Calhoun Circuit Judge, 107 Mich. 130 (64 N. W. 1047); Commonwealth v. McCarthy, 163 Mass. 458 (40 N. E. 766); Sahlinger v. People, 102 Ill. 241; State v. Way, 76 Kan. 928 (93 Pac. 159). The theory is that it is the duty of the defendant to be present until the close of the trial, and if he voluntarily absents himself the court is not obliged to await his pleasure, but may proceed without him."

The record fails to show such leave was obtained from the court.

Defendant says the jury not only returned a verdict of guilty but that the jury foreman apparently signed a verdict finding the defendant not guilty. He contends this created an ambiguity by leaving a doubt as to which verdict was and is the true verdict of the jury, and which one they intended to return. In support of this contention he cites the principle that "Verdicts

in criminal cases should be certain and import a definite meaning free from ambiguity." Keeler v. State, 73 Neb. 441, 103 N. W. 64. However, this is qualified by the following sentence: "If the meaning of the verdict in the light of the whole record is clear, beyond any reasonable doubt, it is sufficient." In the opinion the court goes on to say: "To determine the meaning of the verdict all the parts of the record must be taken into consideration; the indictment and instructions, and in some instances, as in this case, the polling of the jury may be considered. If upon the whole record, so construed, it is clear beyond any reasonable doubt that the jury found the defendant or defendants, who were being tried, guilty of the charge contained in the indictment, the verdict is sufficiently definite."

M. E. Moses, clerk of the district court for Hall County, testified there were two forms of verdict prepared in his office, one to be used if the jury found the defendant guilty and the other if they found him not guilty; that both were submitted to the jury; that he was present when the jury returned its verdict; that the jury returned only one verdict; and that the verdict returned found the defendant guilty. The record shows only one verdict was filed by the clerk, which is the verdict of guilty. It was signed by the foreman. The record of the proceedings on May 17, 1954, shows, in this regard, that: "* * * jury returned into court with a verdict which was filed and read to the jury and they announced that it was their unanimous verdict. Verdict finds defendant guilty as charged."

And, as we have already quoted from Darlington v. State, *supra*: "All presumptions exist in favor of the regularity and correctness of the orders and judgments of courts of general jurisdiction, and he who asserts the contrary is required to establish the alleged defect or error by an exhibition of the record."

It is true that a verdict of not guilty dated and signed by M. E. Hoag, foreman, appears in the record. It ap-

pears from the verdict itself that an attempt was made to erase the date and signature and to cancel the latter. We think, from the record as a whole, it is clear beyond any reasonable doubt that the jury brought in a verdict of guilty.

Defendant contends certain remarks and actions of the trial judge resulted in his rights being prejudiced and that, because thereof, we should grant him a new trial.

It is true that trial judges are charged with the duty of conducting criminal trials in such a manner that the accused may have a fair and impartial trial uninfluenced by prejudice, passion, and public clamor. Cooper v. State, 120 Neb. 598, 234 N. W. 406. However, in order to have this issue reviewed by this court, we have said:

"Unless the record discloses an objection or an exception to remarks of a trial judge a complaint with regard thereto cannot be reviewed on appeal." Morrow v. State, 146 Neb. 601, 20 N. W. 2d 602.

"A prerequisite to review on appeal of alleged improper conduct of and statements by a trial judge, on the trial in the presence of the jury, is an objection and exception thereto." Bolio v. Scholting, 152 Neb. 588, 41 N. W. 2d 913.

"It is mandatory that alleged errors occurring in the trial of a criminal case must be pointed out to the trial court in a motion for new trial and a ruling obtained thereon as a prerequisite to a review of them in this court." Bryant v. State, 153 Neb. 490, 45 N. W. 2d 169.

"This contention cannot be examined and determined because of the absence of objection to the ruling of the trial court in this regard in either the motion for a new trial, the petition in error, or the assignments of error in the brief of defendant." Fisher v. State, 154 Neb. 166, 47 N. W. 2d 349. See, also, Pittenger v. Salisbury & Almquist, 125 Neb. 672, 251 N. W. 287.

Defendant failed to meet the foregoing requirements

and consequently this contention is not here for our consideration.

Defendant contends the trial court abused its discretion when, as of March 16, 1954, it refused to grant him a continuance.

"An application for postponement of time of trial of a criminal case is addressed to the sound discretion of the trial court, and in the absence of abuse of discretion disclosed by the record, a denial thereof is not error." Darlington v. State, *supra*. See, also, § 25-1148, R. R. S. 1943.

"Absence of the exercise of a proper discretion or of prejudice to the party complaining of the denial of the request for postponement of time of trial will not be presumed but must be shown by him." Darlington v. State, *supra*.

What is said in Darlington v. State, *supra*, has application here. Therein we said: "The evidence intended to sustain the allegations of fact in the motion for continuance made by defendant was not preserved, authenticated, and lodged in this court as required by the rule of practice so that the court is permitted or authorized to consider it. The affidavits attached to and filed with the motion, intended as evidence to support statements made therein, are included in the transcript of which they are not legally or legitimately a part, but they are not included in the bill of exceptions, and the record does not disclose that they were offered or received in evidence in the district court on the hearing of the motion therein. It has long been a mandatory requirement in this jurisdiction, recently again stated by this court, that affidavits used as evidence on the hearing or trial of any issue of fact must have been, as a prerequisite to examination of them in this court, identified and offered in evidence in the trial court and embodied in a bill of exceptions."

The condition of the record here deprives this court of the right or power to review any evidence considered

by the trial court on the hearing of the motion of the defendant for a continuance. The order of the district court disposing of the motion is in this situation conclusively presumed to be correct.

Defendant contends, because of the fact that the 1953 Legislature in amending section 39-725, R. R. S. 1943, left out section 39-723, R. R. S. 1943, that no statutory penalty exists in this state for violating section 39-723, R. R. S. 1943. In this regard section 39-7,127, R. R. S. 1943, provides, insofar as here material, that: "Any person who shall violate any of the provisions * * * of any other law of this state relating to the operation of motor vehicles, shall, * * * upon conviction thereof be punished as follows: (1) For a first such offense, such person shall be fined not less than ten dollars nor more than fifty dollars, or imprisoned in the county jail for not more than thirty days, or both; * * *."

We find, since the effective date of the 1953 Legislature's amendment of section 39-725, R. R. S. 1943, that section 39-7,127, R. R. S. 1943, has application to any violation of section 39-723, R. R. S. 1943. In view thereof the trial court had authority to sentence defendant to 30 days in jail.

Defendant contends that the sentence of 30 days in jail is excessive.

"Where the punishment of an offense created by statute is left to the discretion of a court, to be exercised within certain prescribed limits, a sentence imposed within such limits will not be disturbed unless there appears to be an abuse of such discretion." Salyers v. State, *ante* p. 235, 66 N. W. 2d 576. See, also, Taylor v. State, *ante* p. 210, 66 N. W. 2d 514.

Defendant was not given the maximum sentence as, in addition to the 30 days in jail, he could have been fined up to $50 and his driver's license suspended. See, § 60-427, R. R. S. 1943; Kroger v. State, 158 Neb. 73, 62 N. W. 2d 312.

The evidence shows a high degree of violation which,

without question, must have endangered others of the traveling public who were using the highway at the same time. Rules regulating the use of our highways are intended to safeguard the public while using them. Under the circumstances disclosed by the record no abuse of the authority to impose sentence is here shown.

We find all of defendant's contentions to be without merit and therefore affirm the judgment and sentence of the trial court.

AFFIRMED.

HAROLD E. COX, PLAINTIFF IN ERROR, V. STATE OF NEBRASKA, DEFENDANT IN ERROR.
68 N. W. 2d 497

Filed February 18, 1955. No. 33660.

1. **Continuances.** The question of whether or not a party shall be granted a continuance is ordinarily dependent upon the discretion of the court to which it is addressed.
2. **Continuances: Appeal and Error.** The question of whether or not the trial court properly exercised its discretion in refusing to grant a continuance is one which is subject to review on appeal.
3. ———: ———. In determining whether or not the trial court has abused its discretion in refusing to grant a continuance it is proper to look to the entire record in the case.
4. **Trial.** If the court has instructed the jury generally on the law of the case and has not withdrawn any essential issue from consideration of the jury error cannot be predicated on failure to charge on some particular phase of the case, unless proper instruction has been requested by the party complaining.
5. **Trial: Appeal and Error.** The failure of the court to give an instruction relative to evidence introduced to prove good character does not operate to effect a reversal of the judgment in the absence of a proffered instruction stating the law in relation thereto.

ERROR to the district court for Lancaster County: HARRY A. SPENCER, JUDGE. *Affirmed.*

Lloyd E. Chapman, for plaintiff in error.

Clarence S. Beck, Attorney General, and *Richard H. Williams,* for defendant in error.

Heard before SIMMONS, C. J., CARTER, MESSMORE, YEAGER, CHAPPELL, WENKE, and BOSLAUGH, JJ.

YEAGER, J.

This is a criminal action originally instituted in the municipal court of the City of Lincoln, Nebraska, wherein the State of Nebraska was plaintiff and Harold E. Cox was defendant. By complaint duly filed it was charged that Cox committed the offense of operating a motor vehicle on the highways of Lancaster County, Nebraska, while under the influence of intoxicating liquor. In that court he was tried on March 12, 1954, and on that date convicted of the offense charged against him. From the conviction he appealed to the district court where, on April 29, 1954, he was tried to a jury. On April 30, 1954, the jury returned a verdict finding him guilty of the charge. Following conviction he filed a motion for new trial which motion was overruled June 25, 1954. Following the overruling of the motion for new trial he was sentenced to pay a fine of $100, and his license to operate an automobile was suspended for 6 months from and after payment of the fine and costs. From this judgment and sentence the defendant has come to this court by petition in error seeking a reversal of the judgment and sentence. Cox is plaintiff in error but will be referred to hereinafter as the defendant. The State of Nebraska is defendant in error and will be referred to as the State.

As his first assignment of error as ground for reversal the defendant urges that he was prejudiced by failure of the district court to grant him a continuance.

A party to an action is not entitled to have his case continued as a matter of right. The question of whether or not a continuance shall be granted depends first upon a statutory showing. After the showing has been made, whether or not a continuance shall be allowed is a mat-

ter of discretion for the trial court. § 25-1148, R. R. S. 1943; Sundahl v. State, 154 Neb. 550, 48 N. W. 2d 689; Phillips v. State, 157 Neb. 419, 59 N. W. 2d 598. The defendant made his showing conformable to statute.

While the statute and the decisions place the matter of discretion in the district court the decisions do not allow it to reside there without the right of review. Where it clearly appears from all of the facts and circumstances that there has been an abuse of discretion operating to the prejudice of the party seeking the continuance, in the final determination of the case, this court will grant a new trial. Johnson v. Dinsmore, 11 Neb. 391, 9 N. W. 558; Richelieu v. Union P. R. R. Co., 97 Neb. 360, 149 N. W. 772; Juckniess v. Howard, 120 Neb. 213, 231 N. W. 843; Sundahl v. State, *supra;* Phillips v. State, *supra.*

The record as to this subject is that this case came to trial at 2 p. m. on April 29, 1954. The attorney who represented the defendant at the trial was retained about 11 a. m. on the same day and had no knowledge or information regarding the case prior to that time, in consequence of which he had only 3 hours within which to prepare for trial. The jury was impaneled on April 29, 1954, and the further proceedings were had on April 30, 1954. The defendant had Paul Galter as his attorney on April 19, 1954. On that date the defendant and his then attorney were informed by the court that the case would be tried on April 26, 1954, or as soon thereafter as it could be reached. The court at that time became informed that Galter was about to be called into military service, whereupon Galter and the defendant were informed by the court that in the light of that eventuality the defendant should make arrangements for other counsel. The case was not reached until April 29, 1954. Galter left for military service the evening of April 28, 1954. In the meantime and not until April 29, 1954, at 11 a. m. did the defendant arrange for other counsel.

The basic ground for the request for continuance was, according to the affidavit supporting the motion, that

the attorney needed time to prepare the case, to investigate the facts and the law, to talk to witnesses, and possibly to procure the presence of a physician as a witness.

The conclusion cannot be escaped that there was a dereliction of the defendant in the matter of providing counsel earlier to represent him on the trial of this case. In reviewing the question of whether or not the trial court abused its discretion in denying a continuance, the dereliction of defendant in the matter of providing for himself representation may not be entirely disregarded. However it ought not to be said the dereliction in and of itself was sufficient to deprive him of the right to a fair trial, if it may be said that he did not have a fair trial.

It becomes clear from what was said in the opinion in Johnson v. Dinsmore, *supra,* that in determining whether or not discretion was abused by failure to grant a continuance that it is proper to look to the entire record in the case. We do not think that on a consideration of the entire record it may be said that the defendant did not have a fair trial or that any of his rights were in any manner substantially prejudiced.

There is nothing in the record to show that there were other witnesses who if called would have aided in any respect the defense or weakened the case made against the defendant by the State. There is a speculative suggestion that a physician might have been called who might have weakened the force of the State's evidence with regard to the alcoholic content of a urinary specimen. There was not at that time an offer to show any fact in that connection. There has been no offer since. There is nothing apparent in the bill of exceptions or in any step in the case to indicate that the attorney failed in any way to fully, fairly, ably, and intelligently present the case to the court and to the jury.

The conclusion is that the district court did not err in its refusal to grant a continuance.

The next assignment of error deals with nine instructions given by the court. The nine are discussed separately in the brief but they do not require separate consideration. The gist of the attack, for the most part, is that the submission of the issues was improper in form and not sufficiently elaborate. The instructions have been examined and the examination discloses that the issues were fully and fairly submitted. As to some of them the attack made is that they are ambiguous. We have found no ambiguity in them.

It is the rule that if the court has instructed the jury generally on the law of the case and has not withdrawn an essential issue from consideration of the jury error cannot be predicated on failure to charge on some particular phase of the case, unless proper instruction was requested by the party complaining. Jones v. State, 147 Neb. 219, 22 N. W. 2d 710; Planck v. State, 151 Neb. 599, 38 N. W. 2d 790.

In this case the defendant requested no instructions. We find no prejudicial error in any of the instructions attacked by this assignment.

The third assignment of error relates to failure of the court to instruct with regard to the manner of considering evidence adduced by the defendant as to his reputation for sobriety.

It is true that the defendant did adduce such evidence and that the court failed to instruct in regard thereto. It is also true that the defendant failed to request an instruction relative thereto. The failure of the court to give an instruction relative to evidence introduced to prove good character does not operate to effect a reversal of the judgment in the absence of a proffered instruction stating the law in relation thereto. Sweet v. State, 75 Neb. 263, 106 N. W. 31.

The last two assignments of error are that the verdict is against the weight and reasonableness of the evidence and that it is contrary to law. An examination of the bill of exceptions discloses that the verdict is sustained

by ample evidence which was capable of belief and which, if believed, was sufficient to sustain the charge against the defendant.

We find nothing upon which to base a conclusion that the verdict was contrary to law.

The judgment of the district court is affirmed.

AFFIRMED.

INDEX

Adverse Possession.

Possession by permission of the owner can never ripen into title by adverse possession until after a change of position has been brought home to the adverse party. *Mader v. Mettenbrink* 118

Appeal and Error.

1. Rule for consideration of motion for directed verdict stated. *Vocke v. Thomas* 7
2. It is error for the court to direct a verdict or to render judgment notwithstanding the verdict where the evidence is conflicting. *Vocke v. Thomas* 7
3. When the evidence is conflicting, the verdict of the jury will not be set aside unless it is clearly wrong. *Anderson v. Nelsen* 43
   Myers v. Platte Valley Public Power & Irr. Dist. 493
4. A prerequisite to review on appeal of alleged improper conduct or statements of a trial judge is an exception thereto at the time. *Anderson v. Nelsen* 43
5. Upon a trial de novo in a workmen's compensation case, the Supreme Court will consider the fact that the trial court observed the demeanor of witnesses and gave credence to the testimony of some rather than to the contradictory testimony of others. *Cole v. Cushman Motor Works* 97
6. A review is authorized in the district court by petition in error of final orders such as appraisements of improvements on school lands by county commissioners or supervisors acting as a quasi-judicial tribunal. *Jessen v. Blackard* 103
7. The final action of an administrative tribunal created by statute, where it has jurisdiction of the subject matter and the parties, is conclusive unless reversed or modified in the mode provided by law. *Jessen v. Blackard* 103
8. The trial court is required to consider any competent and relevant facts revealed by a view of the premises as evidence in the case. The Supreme Court on review of findings made by the trial court will give consideration to the fact that the trial court did view the premises if the record contains competent

evidence to support the findings. *Mader v. Mettenbrink* 118

9. Rule for trial de novo of equity actions is stated. *Timmons v. Nelsen* 193
McGraw Electric Co. v. Lewis & Smith Drug Co., Inc. 703

10. In considering a case on appeal, the Supreme Court is required to pass upon such alleged errors as are assigned and discussed. *Timmons v. Nelsen* 193

11. By statute, the Supreme Court has authority to reduce the sentence in a criminal case and to render such sentence as in its opinion is warranted by the evidence. *Taylor v. State* 210

12. Where the record contains no bill of exceptions or the bill of exceptions has been quashed, no question will be considered, the determination of which necessarily involves an examination of the evidence adduced in the trial court. Where the pleadings are sufficient to support the judgment, it will be affirmed. *Taylor v. State* 210

13. In stating the issues to the jury it is error, which may be prejudicial, for the trial court to include allegations of which there is no proof. *Oliver v. Oliver* 218

14. An appeal to the Supreme Court in a workmen's compensation case is considered and determined de novo. *Knudsen v. McNeely* 227

15. An appeal in a condemnation proceeding contemplates the filing of pleadings and a framing of issues in a judicial proceeding in the district court. *Jensen v. Omaha Public Power Dist.* 277

16. In case of an appeal by a taxpayer from the action of a board of equalization in fixing the value of property for taxation, the burden is upon the appellant to show that the action of the board is erroneous. *Watson Industries v. County of Dodge* 311

17. The presumption that a board of equalization acted regularly disappears when there is competent evidence on appeal to the contrary. The reasonableness of the valuation fixed by the board then becomes one of fact based upon evidence, unaided by presumption, with the burden of showing such value to be unreasonable resting upon the taxpayer. *Watson Industries v. County of Dodge* 311

18. Exhibits which are introduced in evidence in a case, or excluded therefrom, must be brought before the

reviewing court in the record if the action of the lower court is to be reviewed. *State v. Allen* 314

19. Affidavits used on a hearing cannot be considered in the appellate court unless preserved by a bill of exceptions. *State v. Allen* 314

20. On appeal, error will not be presumed, but must affirmatively appear in the record. *State v. Allen* 314

21. In the absence of a bill of exceptions it will be presumed that issues of fact presented by the pleadings were established by the evidence, were correctly decided, and in such situation the only issue on appeal is the sufficiency of the pleadings to support the judgment. *State v. Allen* 314

22. In an appeal from an order of the State Railway Commission, question for review is whether the order is or is not unreasonable or arbitrary. *West Nebraska Express v. Pirnie* 353

23. An order of the State Railway Commission, acting within its jurisdiction, which has competent evidence to support it is not unreasonable or arbitrary. *West Nebraska Express v. Pirnie* 353

24. The power of the Supreme Court to permit a pleading to be amended is ordinarily exercised to sustain a judgment and not to reverse it, unless the refusal to allow the amendment would permit a miscarriage of justice. *Barkalow Bros. Co. v. English* 407

25. The statute affords a plain, adequate, and speedy remedy to one whose property has been excessively valued for taxation and in cases in which the county board of equalization has committed prejudicial errors or irregularities in procedure. *Gamboni v. County of Otoe* 417

26. Appeals from orders of the State Railway Commission are special and control general statutory provisions. *Doher v. Herman* 438

27. The procedure to be followed in perfecting an appeal to the Supreme Court from the State Railway Commission is governed by the same provisions in force with reference to appeals from the district courts, except as otherwise specifically provided. *Doher v. Herman* 438

28. Any order of the State Railway Commission is reviewable which meets the conditions set forth in the statutes and which involves a justiciable issue that is decisive of some subject matter of which the commission has jurisdiction and the power to en-

force against any party to the proceeding. *Doher v. Herman* 438

29. Any action by or order of the State Railway Commission which is merely procedural or interlocutory in character is not the kind and type of order from which an appeal can be taken directly to the Supreme Court. *Doher v. Herman* 438

30. On appeal to the Supreme Court from an order of the State Railway Commission, while acting within its jurisdiction, the question for determination is the sufficiency of the evidence to prove that the order is not unreasonable or arbitrary. *Watson Bros. Transp. Co. v. Red Ball Transf. Co.* 448

31. The writ of habeas corpus is not a corrective remedy, and is never allowed as a substitute for appeal or proceeding in error. *State ex rel. Hamilton v. Boiler* 458

32. Rule stated governing consideration by Supreme Court of appeals in habeas corpus involving the custody of an infant. *State ex rel. Hamilton v. Boiler* 458

33. By statute, no judgment shall be set aside, or new trial granted, or judgment rendered in any criminal case, on the grounds of misdirection of the jury if the Supreme Court, after an examination of the entire cause, shall consider that no substantial miscarriage of justice has actually occurred. *Bell v. State* 474

34. Misdirection of a jury does not require that a judgment shall be set aside unless there is a substantial miscarriage of justice. *Bell v. State* 474

35. Statute authorizing Supreme Court to reduce sentence is applicable only in those cases where it is apparent that the trial court has abused its judicial discretion and fixed a penalty which is clearly excessive. *Bell v. State* 474

36. The Supreme Court is not vested with authority to set aside the verdict of a jury, having for its support sufficient competent evidence, even though the court may be of the opinion that had it been the trier of the case, it would have reached a different conclusion. *Myers v. Platte Valley Public Power & Irr. Dist.* 493

37. Instructions not complained of in such a way as to be reviewable in the Supreme Court will be taken as the law of the case. If, when tested by such instructions, the verdict is not vulnerable to the ob-

jections lodged against it, the assignments will not be sustained. *Myers v. Platte Valley Public Power & Irr. Dist.* 493

38. Where there is no proper or adequate showing that the verdict of a jury resulted through passion, bias, or prejudice the verdict of the jury will not be disturbed on appeal. *Myers v. Platte Valley Public Power & Irr. Dist.* 493

39. The trial court should submit to the jury only such issues as find some support in the evidence. Where an issue is submitted without support in the evidence and is calculated to mislead the jury in the consideration of the facts to the prejudice of the complaining party, the judgment must be reversed. *Fuss v. Williamson* 525

40. It is reversible error for the trial court to include in its instructions allegations of fact found in the pleadings which have not been supported by the evidence. *Fuss v. Williamson* 525
Fick v. Herman 758

41. The transcript of the district court on appeal to the Supreme Court imports absolute verity. *Zabloudil v. Lane* 547

42. Where a transcript on appeal from the county court to the district court was filed in the district court within the time provided by law for filing and docketing but was not docketed within that time, dismissal of the appeal in the district court on that ground is improper. *Zabloudil v. Lane* 547

43. The neglect of the clerk of the district court to docket a case on appeal from the county court where the transcript has been filed within the time provided by law does not defeat the jurisdiction of the district court. *Zabloudil v. Lane* 547

44. The proof in a trial of a jury case must be confined to legal evidence tending to prove or disprove an issue made by the pleadings and the admission of improper evidence is prejudicial if it may have influenced the verdict. *Higgins v. Loup River Public Power Dist.* 549

45. If it does not appear from the record that evidence wrongfully admitted in the trial of a jury case did not affect the result of a trial unfavorably to the party against whom it was admitted its reception must be considered prejudicial error. *Higgins v. Loup River Public Power Dist.* 549

46. The scope of the cross-examination of a witness

rests largely in the discretion of the trial court, and its ruling will be upheld, unless an abuse of that discretion is shown. *Garcia v. State* 571

47. Condemnation is a special statutory proceeding. On appeal to the district court from an appraisement of damages in such cases, if other issues than the question of damages are involved, they must be presented by proper pleadings. *Platte Valley Public Power & Irr. Dist. v. Armstrong* 609

48. If on appeal to the district court a condemner claims special benefits, such issue should be appropriately pleaded and supported by competent evidence. *Platte Valley Public Power & Irr. Dist. v. Armstrong* 609

49. The exercise of authority to vacate an adjudication in a civil case during the term of the court in which it is made is a matter of legal discretion. The court is limited by the facts shown for relief from the adjudication. An abuse of discretion may be corrected by an appellate court. *County of Scotts Bluff v. Bristol* 634

50. In the absence of a bill of exceptions, it will be presumed in the Supreme Court that any issue of fact in the case was correctly determined, and the judgment rendered will be affirmed if the pleadings support the judgment. *Mitchell v. State* 638

51. The right of appeal in this state is purely statutory and, unless a statute provides for an appeal from the decision of a quasi-judicial tribunal, such right does not exist. *Watkins v. Dodson* 745

52. A bill of exceptions duly allowed and certified by the trial judge imports absolute verity and its truthfulness cannot be assailed collaterally. *Bors v. McGowan* 790

53. Affidavits used as evidence on the hearing of an issue of fact must be offered in evidence in the trial court and embodied in a bill of exceptions to be available in the Supreme Court. *Hyslop v. State* 802

54. Unless the record discloses an objection or an exception to remarks of a trial judge, a complaint with regard thereto cannot be reviewed on appeal. *Hyslop v. State* 802

55. It is mandatory that alleged errors occurring in the trial of a criminal case must be pointed out in the motion for a new trial, the petition in error, and the assignments of error in the brief. *Hyslop v. State* 802

56. The question of whether or not the trial court properly exercised its discretion in refusing to grant a continuance is one which is subject to review on appeal. *Cox v. State* 811
57. In determining whether or not the trial court has abused its discretion in refusing to grant a continuance it is proper to look to the entire record in the case. *Cox v. State* 811
58. The failure of the court to give an instruction relative to evidence introduced to prove good character is not reversible error in the absence of a proffered instruction stating the law in relation thereto. *Cox v. State* 811

Assault and Battery.

An aider and abettor to an assault and battery may be prosecuted and punished as if he were the principal offender. *Salyers v. State* 235

Attorney and Client.

1. Litigant was not entitled to an allowance for attorney's fees and expenses of the litigation to be paid out of trust fund, where administrative and independent action of Board of Educational Lands and Funds caused the accrual to and augmentation of the trust fund. *State ex rel. Ebke v. Board of Educational Lands & Funds* 79
2. Where litigation is conducted solely for the benefit of a litigant and not for the benefit of the school lands trust fund and the litigant is not a beneficiary of the trust fund, such litigant is not entitled to have attorney's fees and expenses of litigation paid out of the trust fund. *State ex rel. Ebke v. Board of Educational Lands & Funds* 79
3. The recovery of attorney's fees and expenses are allowed only in such cases as are provided for by statute, or where the uniform course of procedure has been to allow such recovery. *State ex rel. Ebke v. Board of Educational Lands & Funds* 79
4. A litigant may not have an allowance of an attorney fee by the court unless it is authorized by statute or a uniform course of procedure. *Ehlers v. Campbell* 328
5. Recovery of attorney's fees and expenses are allowed only in such cases as are provided for by statute, or where the uniform course of procedure

has been to allow such recovery. *Gamboni v. County of Otoe* 417

6. Where one has created or preserved or protected a fund in a court of equity in which others are entitled to share, such others will be required to contribute their share to the reasonable costs and expenses of the litigation, including reasonable fees to the litigant's counsel. *Gamboni v. County of Otoe* 417
7. All in a class benefited should contribute to the expense of litigation. The share is necessarily entirely dependent upon the success of the litigation. *Gamboni v. County of Otoe* 417
8. When an attorney is shown to have converted funds to his own use which he held as referee in a partition suit, and refused to account for same for more than 3 years, he is subject to disbarment. *State ex rel. Nebraska State Bar Assn. v. Hungerford* 468
9. In admitting a lawyer to the bar and granting him a license to practice law, it is with the understanding that he will faithfully discharge his duties, uphold and obey the Constitution and laws of the state, observe established standards and codes of professional ethics, maintain the respect due to courts of justice, and abstain from all offensive practices which cast reproach on courts and the profession of law. *State ex rel. Nebraska State Bar Assn. v. Hungerford* 468
10. A restitution of funds wrongfully converted by a lawyer, after he is faced with legal accountability, is not an exoneration of his professional misconduct. *State ex rel. Nebraska State Bar Assn. v. Hungerford* 468

Automobiles.

1. The duty of a guest riding in an automobile is to use care in keeping a lookout commensurate with that of an ordinary prudent person under like cirstances. *Scott v. Service Pipe Line Co.* 36
2. A guest is not required to use the same degree of care as the driver of the automobile. If a guest perceives danger, or should have perceived it under the circumstances shown by the evidence, a duty to warn the driver arises. Ordinarily, however, a guest need not watch the road or advise the driver in the management of the automobile. *Scott v. Service Pipe Line Co.* 36
3. Where the evidence shows that the driver of an

automobile observed the danger simultaneously with or prior to the guest, no duty to warn the driver arises. *Scott v. Service Pipe Line Co.* 36

4. It is not contributory negligence for a guest to sleep while riding in an automobile when the guest has no knowledge of negligent driving on the part of the host or of impending danger on the highway. *Scott v. Service Pipe Line Co.* 36

5. It is the duty of a guest with knowledge of approaching danger to warn the host if there is time and opportunity, unless it reasonably appears that a warning would not be heeded or that the driver observed the danger the same as the guest. *Scott v. Service Pipe Line Co.* 36

6. Where the negligence of the driver of an automobile cannot be imputed to a guest, and there is no evidence of contributory negligence on the part of such guest, it is prejudicial error to instruct on comparative negligence in a suit by the guest against the driver of another automobile. *Scott v. Service Pipe Line Co.* 36

7. Whoever causes the death of another without malice while engaged in the unlawful operation of a motor vehicle is guilty of motor vehicle homicide. *Birdsley v. Kelley* 74

8. It is unlawful to drive a motor vehicle on a public highway at night in excess of 50 miles an hour. *Birdsley v. Kelley* 74

9. The purpose of the act relating to the transfer of title to motor vehicles is to provide a means of identifying motor vehicles, to ascertain the owner thereof, to prevent theft of motor vehicles, and to prevent fraud. *State Farm Mutual Auto Ins. Co. v. Drawbaugh* 149

10. A certificate of title of a motor vehicle is generally conclusive evidence in this state of the ownership of the vehicle. *State Farm Mutual Auto Ins. Co. v. Drawbaugh* 149

11. The word "owner" means one who has the legal title or rightful title, whether the possessor or not. *State Farm Mutual Auto Ins. Co. v. Drawbaugh* 149

12. A guest is a person who accepts a ride in a motor vehicle without giving compensation therefor. *Born v. Estate of Matzner* 169

13. The words of the statute "without giving compensation therefor" do not limit compensation to persons paying for transportation in cash or its equivalent

and do not require that the compensation be exclusively from the passenger to the driver. *Born v. Estate of Matzner* 169

14. Test stated for determining whether or not person riding in motor vehicle was a guest. *Born v. Estate of Matzner* 169

15. A benefit to the owner or operator of a motor vehicle sufficient to remove an occupant riding in it from the provisions of the guest statute must be a tangible and substantial one and a motivating influence for furnishing the transportation. *Born v. Estate of Matzner* 169

16. Where the pastor and members of a church organization made a trip in an automobile owned by the pastor to a district meeting of the church organization without payment of money or its equivalent to the pastor, the relationship between the occupants of the automobile was of a social nature and was within the guest statute. *Born v. Estate of Matzner* 169

17. Where owner of automobile did not furnish transportation in consideration of anything to be performed by passenger, any mutual benefit or benefit derived by owner from the trip was not of such a nature as to render the guest statute inapplicable. *Born v. Estate of Matzner* 169

18. The transportation furnished by the owner of a motor vehicle under the circumstances stated in the opinion did not promote or benefit any mutual interest or business of the owner and a passenger because the presence of the owner at the meeting was not necessary for or contributory to the passenger deriving full benefit from the meeting. *Born v. Estate of Matzner* 169

19. The violation of traffic regulations is not negligence as a matter of law of any kind or degree, but it is a fact to be considered with the other evidence in the case in deciding an issue of negligence. *Born v. Estate of Matzner* 169

20. In order to recover damages for injury received while riding in a motor vehicle operated by his host, a guest must prove by the greater weight of the evidence the gross negligence of the host and that it was the proximate cause of the accident and injury. *Born v. Estate of Matzner* 169

21. In order to recover against host, guest must prove gross negligence and that such negligence was the

proximate cause of the injury. *Ottersberg v. Holz* 239

22. Under guest statute, gross negligence cannot be predicated upon momentary distraction of attention of the operator of motor vehicle by some matter of immediate concern to him. *Ottersberg v. Holz* 239

23. In a collision between two automobiles at a street intersection, driver of automobile entering the intersection last must respect the right-of-way of driver of automobile first in the intersection. Question of contributory negligence of driver first in the intersection was for the jury. *Fuss v. Williamson* 525

24. In order for physical facts to be sufficient to warrant a directed verdict in an automobile collision case, they must conclusively demonstrate that the collision out of which the injuries arose was not caused by any negligence on the part of the party making the motion. *Young v. Stoetzel* 624

25. The limitation of the weight of a vehicle and its cargo propelled over a public highway is a proper subject for the exercise of the police power of the state. *State v. Luttrell* 641

26. By statute, the maximum weight that may lawfully be imposed on the highway by any 2 or more consecutive axles of a vehicle or a combination of vehicles, if the distance between the extreme axles of the 2 or more consecutive axles is 22 feet or less, may not exceed that stated for the respective distance in the table which is a part of the statute. *State v. Luttrell* 641

27. The word "group" in the statute imposing limitation on weight of motor vehicle and load means any 2 or more consecutive axles of a vehicle or combination of vehicles where the distance between the extreme axles of the 2 or more consecutive axles is 22 feet or less. *State v. Luttrell* 641

28. Statute imposing limitation on weight of motor vehicle and load permitted on highway was not vague, uncertain, or ambiguous. *State v. Luttrell* 641

29. The stalling of a motor vehicle on a public highway caused by the failure of its mechanism is not negligence, but a failure to use ordinary care and diligence in removing it from the highway within a reasonable time after it is possible to do so is negligence. *Ricker v. Danner* 675

30. If the negligence of the driver of an automobile in which plaintiff was riding as a passenger was the

sole proximate cause of the collision in which plaintiff was injured, he may not recover from a third person for such injury. *Ricker v. Danner* 675

31. It is a general principle, subject to exceptions, that it is negligence for a motorist to drive a motor vehicle on a public highway, at any time, at a speed or in such a manner that it cannot be stopped or its course changed in time to avoid a collision with an obstruction discernible within his range of vision ahead. *Ricker v. Danner* 675

32. An instruction that it is the duty of the driver of a motor vehicle to avoid a collision if possible is prejudicially erroneous. Such an instruction places too great a duty upon the driver of the motor vehicle. *Fick v. Herman* 758

33. The driver of a motor vehicle has a duty to exercise the degree of care and caution which an ordinary prudent person would exercise under similar circumstances. *Fick v. Herman* 758

34. Rule and exceptions stated with reference to duty of motorist driving a motor vehicle on a highway at night. *Fick v. Herman* 758

Banks and Banking.

Withdrawal of funds in a joint bank account by one joint tenant with the knowledge and consent of the other operates as a severance of the joint tenancy with extinguishment of the right of survivorship. *Whiteside v. Whiteside* 362

Brokers.

1. The Real Estate Broker Act is a virtual extension or enlargement of the statute of frauds. *Svoboda v. De Wald* 594

2. A verbal contract for the sale of lands between the owner thereof and any broker or agent employed to sell the same is not contrary to public policy. The parties may carry it out if they wish. Where it is reduced to writing before suit is brought, the object of the statute is fulfilled. *Svoboda v. De Wald* 594

3. A contract sufficient to meet the requirements of the Real Estate Broker Act may be created although the same papers are not signed by the owner and the broker or agent. *Svoboda v. De Wald* 594

4. The word subscribed as used in the statute of

frauds is synonymous with the word signed. *Svoboda v. De Wald* 594

5. The requirement of the Real Estate Broker Act that the contract be subscribed by both parties is met where the signatures of the parties are placed thereon, for the purpose of authenticating and giving force and effect to the contract, either at the bottom, the top, or in the body of the instrument. *Svoboda v. De Wald* 594
6. The fact that the signature of the broker or agent to the contract appears under a designation of witness is sufficient to meet the requirements of the Real Estate Broker Act, where the record sustains a conclusion that he signed it as a party to a binding contract. *Svoboda v. De Wald* 594
7. The requirements of the Real Estate Broker Act are met as to the description of the land if the contract contains data from which the land may be identified and ascertained with certainty. *Svoboda v. De Wald* 594

Compromise and Settlement.

1. Where parties settle a dispute upon a legal question, the fact that there was in truth no actual doubt about the law which was compromised and that the point could have been decided but one way will not render such settlement nugatory. *Selig v. Wunderlich Contracting Co.* 46
2. Voluntary settlement of disputes between parties are to be encouraged and will not be disturbed for any ordinary mistake, either of law or of fact, since their very object is to settle disputes without judicial controversy. *Selig v. Wunderlich Contracting Co.* 46
3. A mistake that would authorize the setting aside of an ordinary contract will not in all cases justify the setting aside of a compromise agreement. *Selig v. Wunderlich Contracting Co.* 46
4. A compromise and settlement of a dispute will not be set aside for mistake where complaining party failed to exercise reasonable diligence to inform himself of accessible means of knowledge. *Selig v. Wunderlich Contracting Co.* 46
5. A party to an agreement of compromise and settlement may, on the theory of ratification, waiver, or estoppel, be precluded from objecting thereto or avoiding it, as by acceptance and retention of the

benefits of the agreement with knowledge of facts invalidating it. *Selig v. Wunderlich Contracting Co.* 46

6. If a party makes a compromise in ignorance of facts, and after the facts are known receives without objection the balance due him by the compromise, he thereby waives the rights which he might otherwise have had. *Selig v. Wunderlich Contracting Co.* 46

Conflict of Laws.

1. Ordinarily, foreign law or valid rights based thereon will be given effect or enforced under the doctrine of comity unless opposed to the settled public policy of the forum. *Kinney Loan & Finance Co. v. Sumner* 57
2. Contracts that are valid and enforceable in the state where made and to be performed do not offend the public policy of this state although they reserve a rate of interest which would be usurious if made in this state. *Kinney Loan & Finance Co. v. Sumner* 57
3. When a valid contract made and to be performed in one state is secured by a mortgage or other lien on land or personal property situated in another state, the question of whether the interest reserved is usurious should generally be determined by the law of the former state. *Kinney Loan & Finance Co. v. Sumner* 57

Constitutional Law.

1. Where a statute is susceptible of two constructions, one of which will render it constitutional and the other unconstitutional, it is the duty of a court to adopt the construction which, without doing violence to the fair meaning of the statute, will render it constitutional. *Jensen v. Omaha Public Power Dist.* 277
2. The constitutional provision as to the manner of setting forth amendatory legislation has no application to an act complete in itself and not in effect amendatory, even though it may modify or destroy the effect of previous legislation. *Jensen v. Omaha Public Power Dist.* 277
3. A home rule charter must be consistent with and subject to the Constitution and laws of this state. A provision of a city home rule charter takes precedence over state statutes only in instances where

the subject matter is of strictly local municipal concern. *Niklaus v. Miller* 301

4. Levy of taxes on shares of bank stock in excess of four mills on the dollar violated rule of uniformity as to class required by the Constitution and was to that extent unenforceable. *Omaha Nat. Bank v. Heintze* 520

5. Part of statute authorizing Superintendent of Public Instruction to formulate rules and regulations for approval of high schools, without standards having been prescribed by Legislature, was unconstitutional. *School District No. 39 v. Decker* 693

6. Rule promulgated by Superintendent of Public Instruction under authority granted by unconstitutional statute was invalid and unenforceable. *School District No. 39 v. Decker* 693

7. The Fair Trade Act is not violative of the Constitution of the United States but is violative of the Sherman Anti-Trust Act. *McGraw Electric Co. v. Lewis & Smith Drug Co., Inc.* 703

8. The Fair Trade Act is unconstitutional for the reason that it grants special privileges and immunities. *McGraw Electric Co. v. Lewis & Smith Drug Co., Inc.* 703

9. The Fair Trade Act is unconstitutional for the reason that, within constitutional meaning, it deprives of liberty and property without due process of law. *McGraw Electric Co. v. Lewis & Smith Drug Co., Inc.* 703

10. The Fair Trade Act is unconstitutional for the reason that it confers upon persons the power to fix and enforce prices of merchandise without impositions of standards therefor. *McGraw Electric Co. v. Lewis & Smith Drug Co., Inc.* 703

11. The Fair Trade Act is unconstitutional for the reason that there is an absence of anything apparent in the act or its title indicating that the purpose of the act is in the public interest. *McGraw Electric Co. v. Lewis & Smith Drug Co., Inc.* 703

12. The Legislature may not constitutionally, under the guise of public interest, grant power without control or check, which may be exercised at will, with or without reason, arbitrarily or capriciously. *McGraw Electric Co. v. Lewis & Smith Drug Co., Inc.* 703

13. If an unconstitutional section of an act was an inducement to the passage of an entire act, the en-

tire act is unconstitutional. *McGraw Electric Co. v. Lewis & Smith Drug Co., Inc.* 703

14. If an act as originally passed was unconstitutional because it contained matter different from that expressed in the title, or referred to more than one subject matter, it becomes valid law, if otherwise constitutional, on adoption by the Legislature and incorporation into a general revision without reference to title as originally enacted. *McGraw Electric Co. v. Lewis & Smith Drug Co., Inc.* 703

15. An act invalid before inclusion in a revision by reason of the fact that it was induced by an unconstitutional section of the act remains invalid and is not aided or revived by incorporation into an authorized revision. *McGraw Electric Co. v. Lewis & Smith Drug Co., Inc.* 703

16. Fair Trade Act was unconstitutional for reasons stated. *General Electric Co. v. J. L. Brandeis & Sons* 736

17. Due process of law implies the right of the person affected thereby to be present before the tribunal which pronounces judgment; to be heard by testimony or otherwise; and to have the right of controverting by proof every material fact which bears on the matter involved. *Watkins v. Dodson* 745

18. A property owner cannot be deprived by the courts, the city council, or the Legislature, of the right to be present and heard before being deprived of his property. *Watkins v. Dodson* 745

19. Even actual knowledge of the owner of property of the appointment of the appraisers under an unconstitutional act cannot operate as a substitute for notice required by due process of law. The law must require notice and give a right and an opportunity to be heard. *Watkins v. Dodson* 745

20. Section of School Land Lease Act fails to provide for notice to be given the owner of improvements so that he may appear before the appraisers and protect his rights and, for failure to so provide, is unconstitutional and void. *Watkins v. Dodson* 745

21. An unconstitutional statute is a nullity, is void from its enactment, and is incapable of creating any rights or obligations. *Watkins v. Dodson* 745

22. Where a litigant did not ask that an appraisement be made, took no part in it, only obtained knowledge of an appraisement when the county commissioners made and filed their report, and did

not invoke the statute or seek any benefits thereunder, he is not estopped from raising the question of the constitutionality of such statute. *Watkins v. Dodson* 745

Continuances.

1. An application for postponement of time of trial of a criminal case is addressed to the sound discretion of the trial court and, in the absence of abuse of discretion disclosed by the record, a denial thereof is not error. *Hyslop v. State* 802
2. The question of whether or not a party shall be granted a continuance is ordinarily dependent upon the discretion of the court to which it is addressed. *Cox v. State* 811
3. The question of whether or not the trial court properly exercised its discretion in refusing to grant a continuance is one which is subject to review on appeal. *Cox v. State* 811
4. In determining whether or not the trial court has abused its discretion in refusing to grant a continuance it is proper to look to the entire record in the case. *Cox v. State* 811

Contracts.

1. A contract containing mutual obligations of the parties may be changed or modified by mutual consent at any time after its execution, and before a breach has occurred, by a new agreement without any new, independent, or distinct consideration. *Selig v. Wunderlich Contracting Co.* 46
2. The general superintending of construction is, in the absence of a special agreement to the contrary, included in the percentage provision of an agreement for construction of a building on a cost plus basis. *Timmons v. Nelsen* 193
3. The law of the state in which a contract is made and is to be performed is considered as written into, becomes a part of, and governs the contract. *Niklaus v. Miller* 301
4. In the absence of fraud, mistake, or ambiguity a written agreement is not only the best evidence but the only competent evidence as to what is the contract of the parties. *Barkalow Bros. Co. v. English* 407
5. An action in quantum meruit may be joined in a petition with an action on an express contract, and

a judgment based on either will satisfy the liability as to both claims where they have their origin in the same transaction. *Rodgers v. Jorgensen* 485

Conversion.

1. Conversion is any distinct act of dominion wrongfully exerted over another's personal property in denial of or inconsistent with his rights therein. *Jessen v. Blackard* 103
2. An action for conversion is not maintainable unless the plaintiff at the time of the alleged conversion is entitled to immediate possession of the property. The right to maintain the action may not be based upon the right to possession at a future time. *Jessen v. Blackard* 103
3. A bona fide reasonable detention of property for the purpose of ascertaining its true ownership, or of determining the right of the demandant to receive it, will not sustain an action of conversion. A refusal of goods after demand is not conversion, if the circumstances show that it is caused by a reasonable apprehension of the consequences in a doubtful matter. *Jessen v. Blackard* 103
4. Plaintiff's failure to perform a condition precedent will defeat his action for a wrongful conversion. *Jessen v. Blackard* 103

Coram Nobis.

The purpose of a writ of error coram nobis is to enable the court to recall some adjudication, made while some fact existed which, if before the court, would have prevented rendition of the judgment, and which, through no fault of the party, was not presented. *Mitchell v. State* 638

Costs.

1. Costs are allowable, of course, to a plaintiff upon a judgment in his favor in actions for the recovery of money only, or for the recovery of specific real or personal property. *Ehlers v. Campbell* 328
2. In other actions, the court may award and tax costs and apportion them between the parties on the same or adverse sides as in its discretion it may think right and equitable. *Ehlers v. Campbell* 328
3. Where one has created or preserved or protected a fund in a court of equity in which others are entitled to share, such others will be required to

contribute their share to the reasonable costs and expenses of the litigation, including reasonable fees to the litigant's counsel. *Gamboni v. County of Otoe* 417

4. All in a class benefited should contribute to the expense of litigation. The share is necessarily entirely dependent upon the success of the litigation. *Gamboni v. County of Otoe* 417

Counties.

Unless prohibited by statute, a county board may adopt such means to assist county officers to properly discharge the duties of their offices as in its judgment it shall deem necessary. *Gamboni v. County of Otoe* 417

Courts.

1. Inherent power of court of record to enter judgment nunc pro tunc extends as well to the supplying of omissions as to the correction of mistakes, and may proceed upon any satisfactory evidence. *Fisher v. Minor* 247
2. In the absence of constitutional restraint on the legislative power, courts have no power to interfere with action resting in the legislative discretion. Any wrongs must be righted through the ballot box. *School District No. 49 v. School District No. 65-R* 262
3. The Supreme Court will not ordinarily disturb a decision of the district court in determining whether or not good cause has been shown for the failure of a party to plead within the time required. *Jensen v. Omaha Public Power Dist.* 277
4. In an eminent domain proceeding, the district court did not abuse its judicial discretion in striking affidavits from the files under circumstances recited. *Jensen v. Omaha Public Power Dist.* 277
5. Property seized in enforcing a criminal law is in the custody of the court. Proper procedure for the return of the property taken in a criminal case is to apply to the court for its return, especially if the property has been offered in evidence. *State v. Allen* 314
6. A court which has in its possession property involved in litigation may exercise exclusive jurisdiction over such property to determine the right of possession thereto. *State v. Allen* 314
7. The trial court is vested with legal discretion in the

matter of disposing of property claimed as evidence, and this discretion extends even to the manner of proceeding in the event the accused claims it was wrongfully taken from him. *State v. Allen* 314

8. Property introduced in evidence is in custodia legis, and while it is in custodia legis it is not subject to garnishment or other civil process. *State v. Allen* 314

9. Courts should review or interfere with administrative and legislative action of the State Railway Commission only so far as it is necessary to keep it within its jurisdiction and protect legal and constitutional rights. *Watson Bros. Transp. Co. v. Red Ball Transf. Co.* 448

Criminal Law.

1. A defendant, by pleading guilty, waives all defenses other than that the information charges no offense. *Taylor v. State* 210

2. A valid plea of guilty, accepted and entered by the court, is the equivalent of a conviction, the effect of which is to authorize the imposition of the sentence prescribed by law. *Taylor v. State* 210

3. Where the punishment of an offense created by statute is left to the discretion of a court to be exercised within certain prescribed limits, a sentence imposed within such limits will not be disturbed unless there appears to be an abuse of discretion.
Taylor v. State 210
Nelsen v. State 663
Thompson v. State 685
Hyslop v. State 802

4. By statute, the Supreme Court has authority to reduce the sentence in a criminal case and to impose such sentence as in its opinion is warranted by the evidence. *Taylor v. State* 210

5. Where the record contains no bill of exceptions or the bill of exceptions has been quashed, no question will be considered, the determination of which necessarily involves an examination of the evidence adduced in the trial court. Where the pleadings are sufficient to support the judgment, it will be affirmed. *Taylor v. State* 210

6. An aider and abettor to an assault and battery may be prosecuted and punished as if he were the principal offender. *Salyers v. State* 235

7. A common purpose among two or more persons to

commit a crime may be shown by circumstantial evidence. *Salyers v. State* 235
8. Rule for direction of verdict for defendant in criminal case stated. *Salyers v. State* 235
9. A sentence imposed within prescribed statutory limits will not be disturbed unless there appears to be an abuse of discretion. *Salyers v. State* 235
10. Property seized in enforcing a criminal law is in the custody of the court. Proper procedure for the return of the property taken in a criminal case is to apply to the court for its return, especially if the property has been offered in evidence. *State v. Allen* 314
11. The same rule as to the information, conduct of the case, and punishment applicable to a principal in fact governs his aider, abettor, or procurer. No additional facts are required to be set out in the information against the latter than are necessary against the principal. *Burnell v. State* 349
12. The credibility of the witnesses and the weight of their testimony is for the jury to decide. *Burnell v. State* 349
Garcia v. State 571
13. By statute, no judgment shall be set aside, or new trial granted, or judgment rendered in any criminal case, on the grounds of misdirection of the jury if the Supreme Court, after an examination of the entire cause, shall consider that no substantial miscarriage of justice has occurred. *Bell v. State* 474
14. Statute authorizing Supreme Court to reduce sentence is applicable only in those cases where it is apparent that the trial court has abused its judicial discretion and fixed a penalty which is clearly excessive. *Bell v. State* 474
15. Whoever aids, abets, or procures another to commit an offense may be prosecuted and punished as if he were the principal offender. *Garcia v. State* 571
16. Where a defendant in a criminal case testifies in his own behalf he is subject to the same rules of cross-examination as any other witness. Ordinarily he cannot avail himself of the objection that the evidence may incriminate him. *Garcia v. State* 571
17. The testimony of a witness as to a statement made by another person is hearsay when he understood it, not as originally given, but as translated by an interpreter not then under oath. *Garcia v. State* 571

18. It is proper to admit evidence in respect to the conduct of an accused person while in jail awaiting trial. *Garcia v. State* 571
19. The term "res gestae" means things done in and about, and as a part of, the transaction out of which the litigation in hand grew and on which transaction the litigation is based. *Garcia v. State* 571
20. A conviction may rest on the uncorroborated evidence of an accomplice when, considered with all the testimony and circumstances, it satisfies the jury beyond a reasonable doubt of the guilt of the accused. *Garcia v. State* 571
21. If it appears that an accomplice has willfully sworn falsely in regard to a material matter upon the trial, his evidence is not sufficient, if uncorroborated, to support a verdict of guilty. *Garcia v. State* 571
22. The mere fact that a witness in a criminal prosecution is a regular public law enforcement officer does not entitle an accused to an instruction that the jury, in weighing his testimony, should exercise greater care than in weighing the testimony of other witnesses. *Garcia v. State* 571
23. Where informers, detectives, or other persons employed to hunt up testimony against the accused are called to testify against him, he is entitled to an instruction to the jury that in weighing their testimony greater care should be exercised than in the case of witnesses who are wholly disinterested. *Garcia v. State* 571
24. Trial judges and public prosecutors are charged with the duty of conducting criminal trials in such a manner that the accused may have a fair and impartial trial, uninfluenced by prejudice, passion, and public clamor. *Garcia v. State* 571
25. Prosecutors should handle all prosecutions without bias or prejudice as between the public and the defendant. *Garcia v. State* 571
26. It is the duty of the prosecuting attorney to conduct the trial in such a manner as will be fair and impartial to the rights of the accused; and this rule applies to special counsel assisting the prosecuting attorney. *Garcia v. State* 571
27. The purpose of a writ of error coram nobis is to enable the court to recall some adjudication, made while some fact existed which, if before the court, would have prevented rendition of the judgment,

and which, through no fault of the party, was not presented. *Mitchell v. State* 638

28. Insanity is not recognized as a defense to a criminal action, unless it affects the mind of the accused to such an extent that it renders him incapable of distinguishing between right and wrong with reference to the act committed. *Thompson v. State* 685

29. Evidence of the commitment of a defendant to a hospital for the insane raises no presumption that the accused was at the time in question insane in the sense that he was not accountable for the act charged. *Thompson v. State* 685

30. One who has the capacity to distinguish between right and wrong with respect to a criminal act at the time of committing it is legally sane. *Thompson v. State* 685

31. Where the record in a criminal prosecution discloses that the defendant was present during the trial, but is silent as to whether he was present when the verdict was received, it will be presumed that the verdict was properly received and that the defendant was present in court at the time. *Hyslop v. State* 802

32. Verdicts in criminal cases should be certain and import a definite meaning free from ambiguity. However, if the meaning of the verdict in the light of the whole record is clear, it is sufficient. *Hyslop v. State* 802

33. Trial judges are charged with the duty of conducting criminal trials in such a manner that the accused may have a fair and impartial trial uninfluenced by prejudice, passion, and public clamor. *Hyslop v. State* 802

34. It is mandatory that alleged errors occurring in the trial of a criminal case must be pointed out in the motion for a new trial, the petition in error, and the assignments of error in the brief. *Hyslop v. State*.... 802

35. An application for postponement of time of trial of a criminal case is addressed to the sound discretion of the trial court and, in the absence of abuse of discretion disclosed by the record, a denial thereof is not error. *Hyslop v. State* 802

Crops.

1. Rule for recovery of damages to growing crops in eminent domain proceedings stated. *Platte Valley Public Power & Irr. Dist. v. Armstrong* 609

2. The measure of damages to growing crops destroyed by the wrongful act or omission of another is the value at the time of destruction. *Gable v. Pathfinder Irr. Dist.* 778
3. The measure of damages where a crop is injured but not rendered entirely worthless is the difference between the value at maturity of the probable crop if there had been no injury and the value of the actual crop at the time injured less the expense of fitting for market that portion of the probable crop which was prevented from maturing. *Gable v. Pathfinder Irr. Dist.* 778
4. In determining the damage to farm products consideration should be given to the circumstances which conditioned the probability or improbability of the maturing of the crops in the absence of injury, and all other facts and circumstances tending to establish such value, which would properly include those arising before, at the time of, and after injury. *Gable v. Pathfinder Irr. Dist.* 778

Damages.
1. A jury should be fully and fairly informed as to the various items of damages which it should take into consideration in arriving at its verdict. In this respect it is the duty of the trial court to instruct as to the proper basis upon which damages are to be assessed for each such item. *Platte Valley Public Power & Irr. Dist. v. Armstrong* 609
2. A party to an action in condemnation has a right to have all of the competent evidence of which he has availed himself on the question of damages submitted to a jury for consideration, and a failure of the trial court to allow its submission is reversible error. *Platte Valley Public Power & Irr. Dist. v. Armstrong* 609
3. The burden of showing the damages which the landowner or lessee will suffer rests upon him while the burden is on condemner to show matters which tend to reduce or mitigate the damages. *Platte Valley Public Power & Irr. Dist. v. Armstrong* 609
4. The measure of damages for land taken for public use is the fair and reasonable market value of the land actually appropriated and the difference in the fair and reasonable market value of the remainder of the land before and after the taking.

Platte Valley Public Power & Irr. Dist. v. Armstrong 609

5. The office of ad damnum in a pleading is to fix the amount beyond which a party may not recover on the trial of the action. *Gable v. Pathfinder Irr. Dist.* 778
6. The measure of damages to growing crops destroyed by the wrongful act or omission of another is the value at the time of destruction. *Gable v. Pathfinder Irr. Dist.* 778
7. The measure of damages where a crop is injured but not rendered entirely worthless is the difference between the value at maturity of the probable crop if there had been no injury and the value of the actual crop at the time injured less the expense of fitting for market that portion of the probable crop which was prevented from maturing. *Gable v. Pathfinder Irr. Dist.* 778
8. In determining the damage to farm products consideration should be given to the circumstances which conditioned the probability or improbability of the maturing of the crops in the absense of injury, and all other facts and circumstances tending to establish such value, which would properly include those arising before, at the time of, and after injury. *Gable v. Pathfinder Irr. Dist.* 778

Deeds.

1. A deed to real estate may be impeached by either party thereto for fraud or mistake, and parol testimony is competent to reform it so as to make it recite the actual agreement between the parties. *Ingraham v. Hunt* 725
2. Upon the execution, delivery, and acceptance of an unambiguous deed, all prior negotiations and agreements are deemed merged therein, in the absence of a preponderance of evidence clear and convincing in character establishing some recognized exception such as fraud or mistake of fact, and the deed will be held to truly express the intentions of the parties. *Ingraham v. Hunt* 725
3. A reservation is always something taken back out of that which is demised. It is the creation by the grant of a new right from the subject of the conveyance and something which did not exist as an independent right before the grant was made. *Bors v. McGowan* 790

4. An exception excludes from the operation of the conveyance a specified interest which existed as an independent right before the grant was made, and it remains in the grantor unaffected by the conveyance without the necessity of including words of general inheritance. *Bors v. McGowan* 790

Definitions.

The generally accepted meaning of hoodwinked is to deceive as if by blinding, to impose upon, to delude. *Selig v. Wunderlich Contracting Co.* 46

Divorce.

1. Rule for determination of alimony and division of property in divorce case stated. *Eno v. Eno* 1
Kidder v. Kidder 666
2. The amount of alimony to be granted a wife is not to be determined alone from the property possessed by the husband. Many other factors enter into the determination, such as the husband's age, health, earning capacity, future prospects, and social standing. *Eno v. Eno* 1
3. Proceedings to modify a divorce decree with regard to the care, custody, and maintenance of minor children are special statutory proceedings. Jurisdiction must be shown or affirmatively appear upon the record. *Morehouse v. Morehouse* 255
4. While district court may revise or alter divorce decree with respect to custody of children on its own motion, jurisdiction to do so requires notice and opportunity to be heard to be given to parents or other parties in interest. *Morehouse v. Morehouse*..... 255
5. On motion made within 6 months of the rendition of decree, the district court may, in the exercise of a sound discretion, vacate or modify the decree. *Arent v. Arent* 347
6. The question of whether or not there has been corroboration in an action for divorce is one for determination upon the facts and circumstances of each particular case. *Kidder v. Kidder* 666
7. In a case where there has been condonation of cruelty constituting grounds for divorce, repetition revives the cruelty condoned. *Kidder v. Kidder* 666
8. The burden of proof of condonation of cruelty as a defense in an action for divorce is on the party claiming it. *Kidder v. Kidder* 666

Easements.

1. A permissive use of the land of another, that is a use or license exercised in subordination to the other's claim and ownership, is not adverse and cannot give an easement by prescription no matter how long it may be continued. *Mader v. Mettenbrink* 118
2. An easement may be abandoned by unequivocal acts showing a clear intention to abandon and terminate the right. The intention to abandon may be proved by an infinite variety of acts. It is a question of fact to be ascertained from all the circumstances of the case. *Mader v. Mettenbrink* 118
3. By a single instrument of conveyance, there may be created an estate in land in one person and an easement in another. *Bors v. McGowan* 790
4. The extent of an easement created by deed is fixed by the terms of the conveyance and the meaning thereof is to be found in its language construed in the light of relevant circumstances. *Bors v. McGowan* 790
5. The possessor of land subject to an easement created by conveyance is privileged to make such uses of the servient tenement as are not inconsistent with the provisions of the creating conveyance. *Bors v. McGowan* 790
6. Grantee of an easement is given the privilege of maintaining and repairing the premises subject to it so long as he does not unreasonably interfere with the rights of the owner of the servient tenement. *Bors v. McGowan* 790
7. An easement is appurtenant to land when the easement is created to and does benefit the possessor of the land in his use thereof. *Bors v. McGowan* 790

Elections.

1. In a direct action instituted before an election, statutory provisions as to the place for holding an election and the manner of changing the voting places are mandatory. After the election, such statutory requirements will be considered directory unless fraud resulted or the electors were prevented from giving a full and free expression of their will. *School District No. 49 v. School District No. 65-R* 262
2. An adequate remedy for the settlement of the rights of parties in election cases has been provided by either contest or quo warranto and these remedies

are exclusive. *School District No. 49 v. School District No. 65-R* 262

Eminent Domain.

1. Condemnation proceedings commenced in a county court contemplate an informal hearing by the appraisers, a view of the lands, no record of testimony, and a report of damages assessed to be filed subject only to the right of appeal. *Jensen v. Omaha Public Power Dist.* 277
2. An appeal in a condemnation proceeding contemplates the filing of pleadings and a framing of issues in a judicial proceeding in the district court. *Jensen v. Omaha Public Power Dist.* 277
3. If a statute requires that, prior to the institution of condemnation proceedings, attempt to agree with the owner must first be made, such provision is mandatory, and condemnation proceedings are void in case no attempt is made, before beginning them, to come to an agreement with the owner. *Higgins v. Loup River Public Power Dist.* 549
4. In order to satisfy statutory requirement of attempt to agree with the owner prior to the institution of condemnation proceedings, there must be a good faith attempt to agree, consisting of an offer made in good faith and a reasonable effort to induce the owner to accept it. *Higgins v. Loup River Public Power Dist.* 549
5. A good faith attempt and failure to agree prior to institution of condemnation proceedings must be alleged and proved, and must appear on the face of the record. *Higgins v. Loup River Public Power Dist.* 549
6. Where a jury is permitted to view the premises involved in eminent domain litigation, the result of its observations is evidence which, in arriving at a verdict, it may consider only in connection with other competent evidence. *Platte Valley Public Power & Irr. Dist. v. Armstrong* 609
7. The market value of lands taken by eminent domain proceedings, together with damages, if any, to other remaining lands by severance, are computable as of the time of the taking, which is deemed to occur when the petition for condemnation is filed. *Platte Valley Public Power & Irr. Dist. v. Armstrong* 609
8. Damages, in eminent domain proceedings, include all actual damages resulting from the exercise of

the right of eminent domain which diminishes the market value of private property. *Platte Valley Public Power & Irr. Dist. v. Armstrong* 609

9. Rule for recovery of damages to growing crops in eminent domain proceedings stated. *Platte Valley Public Power & Irr. Dist. v. Armstrong* 609

10. Condemnee must establish the elements of damages to growing crops by a preponderance of competent evidence. The proof of damages must be such as to take it out of the realm of speculation. *Platte Valley Public Power & Irr Dist. v. Armstrong* 609

11. If a leasehold interest is taken or injured, lessee is entitled to a sum which will restore the money loss consequent to the taking or injury. This consists generally of the fair market value of the leasehold or unexpired term of the lease. *Platte Valley Public Power & Irr. Dist. v. Armstrong* 609

12. A party to an action in condemnation has a right to have all of the competent evidence of which he has availed himself on the question of damages submitted to a jury for consideration, and a failure of the trial court to allow its submission is reversible error. *Platte Valley Public Power & Irr. Dist. v. Armstrong* 609

13. The burden of showing the damages which the landowner or lessee will suffer rests upon him while the burden is on condemner to show matters which tend to reduce or mitigate the damages. *Platte Valley Public Power & Irr. Dist. v. Armstrong* 609

14. Condemnation is a special statutory proceeding. On appeal to the district court from an appraisement of damages in such cases, if other issues than the question of damages are involved, they must be presented by proper pleadings. *Platte Valley Public Power & Irr. Dist. v. Armstrong* 609

15. If on appeal to the district court a condemner claims special benefits, such issue should be appropriately pleaded and supported by competent evidence. *Platte Valley Public Power & Irr. Dist. v. Armstrong* 609

16. One contiguous tract or unit is that which in general belongs to the same proprietor as that taken, and is continuous with it and used together for a common purpose. *Platte Valley Public Power & Irr. Dist. v. Armstrong* 609

17. Ordinarily in a condemnation proceeding it is a question of law whether or not the property involved constitutes one contiguous unit or tract, but

where the doubt is factual, depending on conflicting evidence or on different views of the evidence, the court should submit the question to the jury under proper instructions. *Platte Valley Public Power & Irr. Dist. v. Armstrong* 609

18. Where the property involved is one contiguous tract or unit, in estimating the damages occasioned by the appropriation of a part thereof for public use, the injury to the property remaining as well as the market value of the property actually taken should be considered, although the petition filed by the condemner for the appointment of appraisers only describes the property taken. *Platte Valley Public Power & Irr. Dist. v. Armstrong* 609

19. The measure of damages for land taken for public use is the fair and reasonable market value of the land actually appropriated and the difference in the fair and reasonable market value of the remainder of the land before and after the taking. *Platte Valley Public Power & Irr. Dist. v. Armstrong* 609

20. Even actual knowledge of the owner of property of the appointment of the appraisers under an unconstitutional act cannot operate as a substitute for notice required by due process of law. The law must require notice and give a right and an opportunity to be heard. *Watkins v. Dodson* 745

21. Section of School Land Lease Act fails to provide for notice to be given the owner of improvements so that he may appear before the appraisers and protect his rights and, for failure to so provide, is unconstitutional and void. *Watkins v. Dodson* 745

22. Where a litigant did not ask that an appraisement be made, took no part in it, only obtained knowledge of an appraisement when the county commissioners made and filed their report, and did not invoke the statute or seek any benefits thereunder, he is not estopped from raising the question of the constitutionality of such statute. *Watkins v. Dodson* 745

Equity.

1. A suit in equity will not lie when the plaintiff has a plain, adequate, and speedy remedy at law. *Gamboni v. County of Otoe* 417

2. An adequate remedy at law means a remedy which is plain and complete, and as practical and efficient to the ends of justice and its prompt administra-

tion as the remedy in equity. *Gamboni v. County of Otoe* 417

3. Laches does not grow out of the mere passage of time. *Watson Bros. Transp. Co. v. Red Ball Transf. Co.* 448
4. Where the petition of a plaintiff shows apparent laches on its face, he must generally account for and excuse his delay by proper pleading and proof. *Watson Bros. Transp. Co. v. Red Ball Transf. Co.* 448
5. A prayer for general relief in an equity action is as broad as the pleadings and the equitable powers of the court. *Rodgers v. Jorgensen* 485
6. The defense of laches prevails only when it has become inequitable to enforce the claimant's right, and is not available to one who has caused or contributed to the cause of delay or to one who has had it within his power to terminate the action. *Bors v. McGowan* 790
7. Courts of equity, when they once have obtained jurisdiction of a case, administer all the relief which the nature of the case and the facts demand, and bring such relief down to the close of the litigation between the parties. *Bors v. McGowan* 790

Estates.

By a single instrument of conveyance, there may be created an estate in land in one person and an easement in another. *Bors v. McGowan* 790

Estoppel.

1. Estoppel cannot arise where the parties interested have equal knowledge of the facts or where the party claiming estoppel is chargeable with notice of the facts or is equally negligent. *Jessen v. Blackard* 103
2. A municipality may within the limitation of its legal powers be estopped by its official acquiescense in an approval of acts originally unauthorized. *School District No. 49 v. School District No. 65-R* 262
3. Estoppel will not lie where the position first assumed was taken as a result of ignorance or mistake, or through the act or fault of party claiming the estoppel. *Jensen v. Omaha Public Power Dist.* 277
4. A party is not estopped from setting up a defense where the necessity for the claim of estoppel arises from errors of judgment of law on the part of one seeking to claim the benefit of estoppel. *Jensen v. Omaha Public Power Dist.* 277

5. Generally when estoppel is relied upon facts constituting it must be pleaded. It cannot be shown under a general denial. Where a party pleads and relies on estoppel the burden of proof is upon him to establish the facts upon which the estoppel is based. *Bors v. McGowan* 790

Evidence.

1. The trial court is vested with legal discretion in the matter of disposing of property claimed as evidence, and this discretion extends even to the manner of proceeding in the event the accused claims it was wrongfully taken from him. *State v. Allen* 314
2. Property introduced in evidence is in custodia legis, and while it is in custodia legis it is not subject to garnishment or other civil process. *State v. Allen* 314
3. In the absence of fraud, mistake, or ambiguity a written agreement is not only the best evidence but the only competent evidence as to what is the contract of the parties. *Barkalow Bros. Co. v. English* 407
4. The allegations of a pleading are always in evidence for all purposes of the trial. They may be used for any legitimate purpose. *Barkalow Bros. Co. v. English* 407
5. A party may invoke the language of the pleading of his adversary on a particular issue on which the case is tried as rendering certain facts indisputable. In doing this he is neither required nor permitted to offer the pleading in evidence. *Barkalow Bros. Co. v. English* 407
   Rodgers v. Jorgensen 485
6. An admission made in a pleading on which the trial is had is more than an ordinary admission. It is a judicial admission. It is not a means of evidence, but a waiver of all controversy, so far as the adverse party desires to take advantage of it, and is therefore a limitation of the issues. *Barkalow Bros. Co. v. English* 407
7. The purpose of the Uniform Business Records as Evidence Act is to permit admission in evidence of systematically entered records without producing evidence of persons who made entries in the records in the regular course of business, rather than to make a fundamental change in the principles of the shop-book exception to the hearsay rule. *Higgins v. Loup River Public Power Dist.* 549

8. The Uniform Business Records as Evidence Act does not make relevant that which is not relevant nor make all business records competent evidence regardless of by whom made, in what manner, and for what purpose they were compiled or offered. *Higgins v. Loup River Public Power Dist.* 549

9. The Uniform Business Records as Evidence Act is applicable only to records made in the regular course of business and it does not apply to any regular course of conduct which may have some relationship to business. *Higgins v. Loup River Public Power Dist.* 549

10. The phrase regular course of business, as used in the Uniform Business Records as Evidence Act, must find its meaning in the inherent nature of the business in question and in the methods systematically employed for the conduct of the business as such. If a record is not of such a character as to give it the status of a business entry it is hearsay and is inadmissible. *Higgins v. Loup River Public Power Dist.* 549

11. Where a defendant in a criminal case testifies in his own behalf he is subject to the same rules of cross-examination as any other witness. Ordinarily he cannot avail himself of the objection that the evidence may incriminate him. *Garcia v. State* 571

12. The scope of the cross-examination of a witness rests largely in the discretion of the trial court, and its ruling will be upheld, unless an abuse of that discretion is shown. *Garcia v. State* 571

13. The testimony of a witness as to a statement made by another person is hearsay when he understood it, not as originally given, but as translated by an interpreter not then under oath. *Garcia v. State* 571

14. It is proper to admit evidence in respect to the conduct of an accused person while in jail awaiting trial. *Garcia v. State* 571

15. A conviction may rest on the uncorroborated evidence of an accomplice when, considered with all the testimony and circumstances, it satisfies the jury beyond a reasonable doubt of the guilt of the accused. *Garcia v. State* 571

16. If it appears that an accomplice has willfully sworn falsely in regard to a material matter upon the trial, his evidence is not sufficient, if uncor-

roborated, to support a verdict of guilty. *Garcia v. State* 571

17. A hypothetical question is improper and should be excluded by the trial court which consists of a recitation of facts and does not furnish a basis for an expert opinion. *Thompson v. State* 685

18. The opinion of a qualified witness as to the value of the services is admissible to prove such value when his testimony will aid the jury. This question is within the judicial discretion of the trial court to decide, and rulings thereon will not be reversed except in case of manifest error. *Comstock v. Evans* 739

Executors and Administrators.

1. A petition for license to sell real estate for the payment of debts acted upon and treated as sufficient by the court is not, in the absence of fraud or collusion, subject to attack in a collateral proceeding. *Fisher v. Minor* 247

2. The authority to grant a license to sell real estate carries with it the implied power to determine the necessity for such sale and the sufficiency of the pleadings presented to the court for that purpose. *Fisher v. Minor* 247

3. A proceeding by an executor for the sale of real estate to pay debts is not subject to collateral attack when the five essentials to a valid sale specified by statute are shown to exist. *Fisher v. Minor* 247

4. Where property is devised to the widow of testator for her life and at her death to his children, the children, during the life of the widow, cannot except to an allowance to the executor on behalf of, and affecting alone, the life interest. *Lund v. Rubeck* 335

5. Orders of the county court ex parte adjusting or correcting accounts of an executor or administrator made while he is acting in such capacity are interlocutory and not final until final settlement of his accounts and his discharge. *Whiteside v. Whiteside* 362

6. When one claims the estate of a deceased person under an alleged oral contract, the evidence of such contract must be clear, satisfactory, and unequivocal. *Eagan v. Hall* 537

Forcible Entry and Detainer.

1. One purpose of the act empowering a justice of the peace to determine the issue in an action of for-

cible entry and detainer is to prevent even rightful owners of realty from taking the law into their own hands and recovering by violence what the remedial powers of a court would grant. *Watkins v. Dodson* 745

2. The service of a notice to quit is a condition precedent to bringing an action of forcible entry and detainer and is not sufficient in and of itself to permit entry by a person claiming the right of possession of the land. Other steps must be complied with before a person may be dispossessed for unlawfully detaining the premises. *Watkins v. Dodson* 745

Fraud.

1. An action for relief on the ground of fraud must be commenced within 4 years of the discovery of the facts constituting the fraud, or of facts sufficient to put a person of ordinary intelligence and prudence on an inquiry which if pursued would lead to such discovery. *Jameson v. Graham* 202
2. When the evidence discloses facts sufficient to put a person of ordinary intelligence and prudence on an inquiry which would disclose the alleged fraud within the statutory period, the statute of limitations is a complete defense. *Jameson v. Graham* 202

Frauds, Statute of.

1. When one claims the estate of a deceased person under an alleged oral contract, the evidence of such contract must be clear, satisfactory, and unequivocal. *Eagan v. Hall* 537
2. Oral agreements claiming the estate of a deceased person are unenforcible under the statute of frauds because not made in writing. Even if proved, they are not enforcible unless there has been such performance as the law requires. *Eagan v. Hall* 537
3. The thing done which is claimed to constitute performance must be such as is referable solely to the oral agreement sought to be enforced, and not from some other relation. *Eagan v. Hall* 537
4. Nothing will be considered as part performance which does not put the party asserting it in a situation amounting to a fraud upon him unless the oral agreement be fully performed. Equity interferes in such cases only to prevent fraud or unconscionable advantage. *Eagan v. Hall* 537

5. Equitable considerations will be considered only as part performance of an oral agreement sufficient to avoid the bar of the statute of frauds. They may not be used to change a tenancy at will to a tenancy from year to year. *Sage v. Shaul* 543
6. The Real Estate Broker Act is a virtual extension or enlargement of the statute of frauds. *Svoboda v. De Wald* 594
7. A verbal contract for the sale of lands between the owner thereof and any broker or agent employed to sell the same is not contrary to public policy. The parties may carry it out if they wish. Where it is reduced to writing before suit is brought, the object of the statute is fulfilled. *Svoboda v. De Wald* 594
8. Contracts within the statute of frauds are not void, but merely unenforceable for want of the evidence which the statute requires. *Svoboda v. De Wald* 594
9. A contract sufficient to meet the requirements of the Real Estate Broker Act may be created although the same papers are not signed by the owner and the broker or agent. *Svoboda v. De Wald* 594
10. The word subscribed as used in the statute of frauds is synonymous with the word signed. *Svoboda v. De Wald* 594
11. The requirement of the Real Estate Broker Act that the contract be subscribed by both parties is met where the signatures of the parties are placed thereon, for the purpose of authenticating and giving force and effect to the contract, either at the bottom, the top, or in the body of the instrument. *Svoboda v. De Wald* 594
12. The fact that the signature of the broker or agent to the contract appears under a designation of witness is sufficient to meet the requirements of the Real Estate Broker Act, where the record sustains a conclusion that he signed it as a party to a binding contract. *Svoboda v. De Wald* 594
13. The requirements of the Real Estate Broker Act are met as to the description of the land if the contract contains data from which the land may be identified and ascertained with certainty. *Svoboda v. De Wald* 594

Habeas Corpus.

1. The sufficiency of evidence adduced at a preliminary examination to hold an accused to answer for a

crime may be raised and tried in habeas corpus proceedings. *Birdsley v. Kelley* 74
2. In a habeas corpus proceeding to test the sufficiency of evidence taken at a preliminary examination to require a person to be tried on a criminal charge, the court will not weigh the evidence but will only inquire as to the existence of evidence to sustain the charge. *Birdsley v. Kelley* 74
3. Habeas corpus is a proper remedy to determine a controversy concerning the right of custody of an infant. *State ex rel. Hamilton v. Boiler* 458
4. Habeas corpus proceedings involving custody of an infant are governed by considerations of expediency and equity, and should not be bound by technical rules of practice. *State ex rel. Hamilton v. Boiler* 458
5. The writ of habeas corpus is not a corrective remedy, and is never allowed as a substitute for appeal or proceeding in error. *State ex rel. Hamilton v. Boiler* 458

Highways.
1. A traveler may ordinarily occupy and use any part of a public highway he desires if it is not needed by another whose right thereto is superior to that of the traveler. *Born v. Estate of Matzner* 169
2. The power of the Legislature to regulate public highways and their use inheres not only in its authority to provide, maintain, and control them, but also in the police power of the state. *State v. Luttrell* 641
3. The right to use public highways for purpose of travel is not an absolute and unqualified one. It may be restricted and controlled by the Legislature in the interest of the safety and general welfare of the public by reasonable and nondiscriminatory regulations. *State v. Luttrell* 641
4. The limitation of the weight of a vehicle and its cargo propelled over a public highway is a proper subject for the exercise of the police power of the state. *State v. Luttrell* 641

Homicide.
1. Whoever causes the death of another without malice while engaged in the unlawful operation of a motor vehicle is guilty of motor vehicle homicide. *Birdsley v. Kelley* 74
2. Homicide committed in the perpetration of a robbery is murder in the first degree. *Garcia v. State* 571

3. If a killing is committed within the res gestae of the felony charged, it is committed in the perpetration of or attempt to perpetrate the felony. *Garcia v. State* 571
4. An information charging defendant with a homicide committed in the perpetration of or attempt to perpetrate a robbery charges only murder in the first degree. It is error for the trial court to instruct the jury that thereunder they may find defendant guilty of murder in the first degree, guilty of murder in the second degree, or guilty of manslaughter. *Garcia v. State* 571
5. A purpose to kill and malice are material elements of murder in the second degree and, under a charge therefor, the burden is on the state to prove both beyond a reasonable doubt. *Woodard v. State* 603
6. Where the evidence does not prove a higher grade of homicide than manslaughter it may be prejudicial error to submit to the jury the issue of murder in the second degree, even though the trial results in acquitting accused of the graver offense and in finding him guilty of the lesser. *Woodard v. State* 603
7. Where the evidence and circumstances of the crime are such that different conclusions may properly be drawn therefrom as to the degree, the trial court is without error in submitting the different degrees to the jury for its determination. *Woodard v. State* 603
8. The law implies malice in cases of homicide if the killing alone is shown, but, if the circumstances attending the homicide are fully testified to by eyewitnesses, it is error to instruct the jury that there is a presumption of malice from the fact of the killing. *Woodard v. State* 603

Homesteads.

Where a homestead vests in a survivor for life and the survivor contracts a debt which is not within the exceptions to the homestead act and such debt is reduced to judgment, the homestead is exempt from such judgment lien and from execution or forced sale to the extent provided by statute. *Ehlers v. Campbell* 328

Husband and Wife.

1. Alienation of affections and criminal conversation are separate and distinct wrongs. *Oliver v. Oliver* 218

2. Alienation of affections is not a necessary element in criminal conversation. The wrong done by alienation of affections is the deprivation of spouse of right to aid, comfort, assistance, and society of other spouse in family relationship, while wrong done in criminal conversation is violation of spouse's right to exclusive privilege of sexual intercourse. *Oliver v. Oliver* 218

Indictments and Informations.

1. The same rule as to the information, conduct of the case, and punishment applicable to a principal in fact governs his aider, abettor, or procurrer. No additional facts are required to be set out in the information against the latter than are necessary against the principal. *Burnell v. State* 349
2. An information charging defendant with a homicide committed in the perpetration of or attempt to perpetrate a robbery charges only murder in the first degree. It is error for the trial court to instruct the jury that thereunder they may find defendant guilty of murder in the first degree, guilty of murder in the second degree, or guilty of manslaughter. *Garcia v. State* 571

Infants.

1. Habeas corpus is a proper remedy to determine a controversy concerning the right of custody of an infant. *State ex rel. Hamilton v. Boiler* 458
2. Habeas corpus proceedings involving custody of an infant are governed by considerations of expediency and equity, and should not be bound by technical rules of practice. *State ex rel. Hamilton v. Boiler* 458
3. The provisions of the Juvenile Court Act for issuance and service of process are jurisdictional. *State v. Andersen* 601
4. In the absence of the issuance and service of process, or a waiver thereof, an order committing a child to the industrial school is void for want of jurisdiction. *State v. Andersen* 601

Interest.

1. The phrase "a regulatory small loan law similar in principle to this act" means a law resembling our own Installment Loan Act in origin, purpose, and result, which licenses, controls, and regulates those engaged in loaning money at conventional

higher rates of interest in order to combat the reservation of extortionate and oppressive rates. *Kinney Loan & Finance Co. v. Sumner* 57

2. The Installment Loan Act comprehensively defines the public policy of this state with regard to enforceability here of loans lawfully made and to be performed outside this state. *Kinney Loan & Finance Co. v. Sumner* 57

Joint Adventures.

A joint adventure is an enterprise undertaken by two or more persons to carry out a single business transaction for profit. *Bard v. Hanson* 563

Joint Tenancy.

1. Either a joint tenancy or a tenancy in common may exist with relation to personal property. Either of such relationships may be created by act of the parties. A tenancy in common may, under proper circumstances, be the product of error, failure, or mistake in an attempt to create a joint tenancy. *Whiteside v. Whiteside* 362
2. A joint tenancy may be created only by act of the parties. A joint tenancy in personal property may be created by oral agreement if it is established by a preponderance of evidence, the quality of which is clear, satisfactory, and convincing in character. *Whiteside v. Whiteside* 362
3. The creation as well as the continued existence of a joint tenancy requires a unity of possession, a unity of interest, a unity of time, and a unity of title in all holding an interest in such estate. *Whiteside v. Whiteside* 362
4. Any act of a joint tenant which destroys one or more of its necessarily coexistent unities operates as a severance of the joint tenancy and extinguishes the right of survivorship. *Whiteside v. Whiteside* 362
5. Withdrawal of funds in a joint bank account by one joint tenant with the knowledge and consent of the other operates as a severance of the joint tenancy with extinguishment of the right of survivorship. *Whiteside v. Whiteside* 362

Judges.

Trial judges are charged with the duty of conducting criminal trials in such a manner that the accused may have a fair and impartial trial uninfluenced

by prejudice, passion, and public clamor. *Hyslop v. State* 802

Judgments.

1. A petition for license to sell real estate for the payment of debts acted upon and treated as sufficient by the court is not, in the absence of fraud or collusion, subject to attack in a collateral proceeding. *Fisher v. Minor* 247
2. A proceeding by an executor for the sale of real estate to pay debts is not subject to collateral attack when the five essentials to a valid sale specified by statute are shown to exist. *Fisher v. Minor* 247
3. The rules relating to nunc pro tunc orders are generally applicable to administrative and quasi-judicial commissions. *Watson Bros. Transp. Co. v. Red Ball Transf. Co.* 448
4. If in fact a judgment or order was made, and such judgment or order not recorded, then the court, at any time afterwards, in a proper proceeding and upon a proper showing, is invested with the power to render nunc pro tunc such judgment or make such order. *Watson Bros. Transp. Co. v. Red Ball Transf. Co.* 448
5. The true purpose of a nunc pro tunc order is to correct the record so that it will truly record the action really had, but which through some mistake has not been truly recorded. *Watson Bros. Transp. Co. v. Red Ball Transf. Co.* 448
6. A nunc pro tunc judgment must conform to and be no broader in its terms than the one originally rendered, meaning the one originally determined and made but not entered. *Watson Bros. Transp. Co. v. Red Ball Transf. Co.* 448
7. An order nunc pro tunc may be based upon any evidence, oral or written, which is sufficient to satisfy the court that the order is required to make the record reflect the truth. *Watson Bros. Transp. Co. v. Red Ball Transf. Co.* 448
8. A court of general jurisdiction has inherent power to vacate an adjudication made by it in a civil case at any time during the term of court in which it was made. *County of Scotts Bluff v. Bristol* 634
9. The exercise of authority to vacate an adjudication in a civil case during the term of the court in which it is made is a matter of legal discretion.

The court is limited by the facts shown for relief from the adjudication. An abuse of discretion may be corrected by an appellate court. *County of Scotts Bluff v. Bristol* 634

10. All presumptions exist in favor of the regularity and correctness of judgments of courts of general jurisdiction. He who asserts the contrary is required to establish the alleged defect or error by an exhibition of the record. *Mitchell v. State* 638

Judicial Sales.

1. The doctrine of caveat emptor applies to all judicial sales in this state, subject to after-discovered mistake of material facts or fraud. The purchaser is bound to examine the title and not rely upon statements made by the officer conducting the sale as to its condition. *Fisher v. Minor* 247
2. It is the duty of the district court to determine whether an amount bid for property offered at a judicial sale is a fair value under the conditions and circumstances of the sale or whether a greater amount would be realized by a subsequent sale of the property. *County of Scotts Bluff v. Bristol* 634

Landlord and Tenant.

1. In the absence of an express covenant or stipulation, a lessor is not bound to make repairs to leased property. *Quist v. Duda* 393
2. The word repair means to restore to a sound or good state after decay, injury, dilapidation, or partial destruction. *Quist v. Duda* 393
3. The term improvements is a much broader term than repair and includes the making of substantial additions or changes in existing buildings. *Quist v. Duda* 393
4. A covenant in a lease, obligating the lessor to keep the premises in good repair, does not impose upon the lessor a duty to make improvements or betterments. *Quist v. Duda* 393
5. A covenant to keep leased premises in repair imposes the obligation to keep the premises in as good repair as when the agreement was made. *Quist v. Duda* 393
6. Covenants to keep premises in repair and to keep in as good repair as they now are amount to the same thing in law. *Quist v. Duda* 393
7. An occupant is one who occupies, an inhabitant;

especially one in actual possession, as a tenant, who has actual possession in distinction from the landlord, who has legal or constructive possession. *Quist v. Duda* 393

8. The word operator generally refers to the person actively and directly engaged in an operation. *Quist v. Duda* 393

9. One who enters into possession of real estate under an agreement which is for an indefinite and uncertain term, or for so long as the tenant wanted to occupy the premises, becomes a tenant at will. *Sage v. Shaul* 543

10. Where no term is mentioned and a tenancy is expressly declared to be at the will of one of the parties, nothing being said as to its binding effect upon the other, it is a tenancy at will of both parties, and either may terminate it at his option. *Sage v. Shaul* 543

11. After a notice terminating a tenancy at will, a landlord may serve the statutory notice to quit and institute proceeding in forcible detainer to recover possession of the premises. *Sage v. Shaul* 543

12. If a leasehold interest is taken or injured, lessee is entitled to a sum which will restore the money loss consequent to the taking or injury. This consists generally of the fair market value of the leasehold or unexpired term of the lease. *Platte Valley Public Power & Irr. Dist. v. Armstrong* 609

Limitations of Actions.

1. An action for relief on the ground of fraud must be commenced within 4 years of the discovery of the facts constituting the fraud, or of facts sufficient to put a person of ordinary intelligence and prudence on an inquiry which if pursued would lead to such discovery. *Jameson v. Graham* 202

2. When the evidence discloses facts sufficient to put a person of ordinary intelligence and prudence on an inquiry which would disclose the alleged fraud within the statutory period, the statute of limitations is a complete defense. *Jameson v. Graham* 202

Master and Servant.

1. The acts of an employee are within the scope of the employment if, and only if, such acts are of the class he is employed to perform or incidental thereto, or are the result of special instructions or di-

rections to perform them. *Scott v. Service Pipe Line Co.* 36
2. In the absence of special authority it is not enough, in order to establish liability on the part of an employer, to show that the employer has an interest in what is being done; it must be made to appear that the employee whose act is in question has authority to perform the class of service to which the act belongs. *Scott v. Service Pipe Line Co.* 36
3. Such words as employments and places of employment, all persons employed, commissions composed of employees, employers and such other persons, and any employer or employee who uses or operates, are words which ordinarily refer to the relation of master and servant. *Quist v. Duda* 393
4. Amendments to act governing safety regulations removed the landlord, who was not an occupant or operator, from the class upon whom duties were imposed by the act. *Quist v. Duda* 393

Mechanics' Liens.
1. A lien for the leveling of land is expressly authorized by statute to both a contractor and subcontractor. *Grantham v. Kearney Municipal Airport Corp.* 70
2. A contractor's lien for land leveling may properly attach to a leasehold. *Grantham v. Kearney Municipal Airport Corp.* 70
3. Since the object of the mechanic's lien law is to secure the claims of those who have made improvements within its terms, it should receive a liberal interpretation. *Grantham v. Kearney Municipal Airport Corp.* 70
4. The general rule is that property acquired by a municipality in its proprietary capacity is subject to the provisions of the mechanic's lien law. *Grantham v. Kearney Municipal Airport Corp.* 70
5. Where a fund is created to pay for improvements made, the holder of a valid contractor's lien for the making of such improvements has an equitable lien on the fund for the payment of the obligation represented by the lien. *Grantham v. Kearney Municipal Airport Corp.* 70
6. An assignment of the proceeds of a contract by a general contractor creates no right as against the valid lien of a subcontractor even though the general contractor's assignment was made before the

work was commenced. *Grantham v. Kearney Municipal Airport Corp.* 70

7. A lien claimant must prove compliance with the mechanic's lien law by evidence. The notice of lien is admissible only to establish the date of filing and the necessary oath attached thereto. *Timmons v. Nelsen* 193

8. Claimed items of mechanic's lien must be established by evidence that the labor or materials claimed were used on the property within the statutory period and that the charges therefor were reasonable and proper. *Timmons v. Nelsen* 193

9. The general superintending of construction is, in the absence of a special agreement to the contrary, included in the percentage provision of an agreement for construction of a building on a cost plus basis. *Timmons v. Nelsen* 193

Mines and Minerals.

1. In the absence of an express agreement or controlling valid governmental regulations, the owner of the mineral interests under a portion of land subject to an oil and gas lease is entitled to all of the rents and royalties accruing from the production of oil or gas from that land even though the lease may cover other tracts. *Rauner v. Jones* 385

2. By the terms of an entirety clause in a gas and oil lease, the parties thereto agree that, in the event the mineral interests under the leased premises become separately owned, the royalties shall nevertheless be treated as an entirety, the separate owners to participate pro rata. *Rauner v. Jones* 385

3. An entirety clause in an oil and gas lease has the effect of placing a restriction upon the power of the lessor to alienate his mineral interests therein contrary thereto as long as the lease containing this clause remains in force and effect. *Rauner v. Jones* 385

Motor Carriers.

1. The State Railway Commission has jurisdiction and authority to suspend, change, or revoke a certificate of convenience and necessity in whole or in part, if in so doing it proceeds in conformity with applicable statutes. *Schmunk v. West Nebraska Express* 134

2. Unless an order of the State Railway Commission is shown to be unreasonable or arbitrary, the Su-

preme Court is not authorized to interfere with the power of the commission to regulate common carriers. *Schmunk v. West Nebraska Express* 134

3. An order of the State Railway Commission is not unreasonable or arbitrary where there is competent evidence to sustain a finding of willful failure to comply with a lawful order of the commission or with a lawful condition of a certificate of convenience and necessity. *Schmunk v. West Nebraska Express* 134

4. The term "willful failure," as used in the Motor Carrier Act, is such behavior through acts of commission or omission justifying a belief that there was an intent entering into and characterizing the failure of which complaint is made. *Schmunk v. West Nebraska Express* 134

5. The grant or denial of a certificate of convenience and necessity by the State Railway Commission requires the exercise of administrative and legislative functions and not of judicial powers. *Schmunk v. West Nebraska Express* 134

6. The burden is on an applicant for a certificate of convenience and necessity to show that the operation under the certificate is and will be required by the present or future public convenience and necessity. *Schmunk v. West Nebraska Express* 134

7. In determining the issues of public convenience and necessity, controlling questions are whether the operation will serve a useful purpose responsive to a public need; whether this purpose can or will be served as well by existing carriers; and whether it can be served by applicant without endangering or impairing the operation of existing carriers contrary to public interest. *Schmunk v. West Nebraska Express* 134

8. The question of the adequacy of service of existing carriers is implicit in determining whether or not convenience and necessity demand the service of an additional carrier in the field. The existence of an adequate and satisfactory service by carriers already in the area is complete negation of a public need and demand for added service by another carrier. *Schmunk v. West Nebraska Express* 134

9. Essential issue presented by an application by a motor marrier to operate over an alternate route stated. *West Nebraska Express v. Pirnie* 353

10. Public convenience and necessity may be found in

operating economies and those things which contribute to expedition, public safety, efficiency, and convenience in operation. *West Nebraska Express v. Pirnie* 353

11. The term public interest as used in the Motor Carrier Act has direct relation to adequacy of transportation service, to its essential conditions of economy and efficiency, and to appropriate provision for and the best use of transportation facilities. *West Nebraska Express v. Pirnie* 353

Municipal Corporations.

1. A city council in its discretion may repeal an ordinance creating a water district when none of the additional procedural steps have been taken as required by the home rule charter of the city. *Brasier v. City of Lincoln* 12
2. Mandamus will not lie to control or review the action of a city council under home rule charter in first creating and then repealing an ordinance creating a water district. *Brasier v. City of Lincoln* 12
3. In an action to disconnect territory from a village, the burden is upon the petitioner to establish by sufficient evidence that justice and equity require that such territory be disconnected. *Egan v. Village of Meadow Grove* 207
4. It is indispensable to the maintenance of an action to detach lands from a municipality that the territory sought to be detached is within the municipality and that a substantial part of the boundary thereof is adjacent to a part of the boundary thereof. Adjacent means contiguous or coexistent with. *Egan v. Village of Meadow Grove* 207
5. Tribunals having charge of the letting of contracts for public works, in passing upon the question of the responsibility of bidders, do not act ministerially only but exercise an official discretion. The action of the board in that respect is judicial in its nature, and the exercise of that discretion is vested in the board and not in the courts. *Niklaus v. Miller* 301
6. Where there is a showing that an administrative body acted upon honest convictions, based upon facts, and as it believed for the best interests of its municipality, and where there is no showing that the body acted arbitrarily from improper motives, it is not the province of the court to interfere and sub-

stitute its judgment for that of the administrative body. *Niklaus v. Miller* 301
7. It is presumed that a public administrative body acts in good faith, with honest motives, and for the purpose of promoting the public good and protecting the public interest. *Niklaus v. Miller* 301
8. A home rule charter must be consistent with and subject to the Constitution and laws of this state. A provision of a city home rule charter takes precedence over state statutes only in instances where the subject matter is of strictly local municipal concern. *Niklaus v. Miller* 301
9. Owners of property are given the right by statute to make objections to a proposed improvement where their property might become subject to assessment for the contemplated improvement. *Hutton v. Village of Cairo* 342
10. The right to object is one which is attached to the ownership of property which might become subject to assessment. *Hutton v. Village of Cairo* 342
11. The right to object is not one which continues after the property owner interest is no longer involved. *Hutton v. Village of Cairo* 342
12. Amendments to the resolution of necessity are authorized and contemplated. *Hutton v. Village of Cairo* 342
13. Resolution of necessity is required to state the outer boundaries of the district or districts in which it is proposed to make special assessments. *Hutton v. Village of Cairo* 342
14. Published notice to contractors is required to state the amount of the engineer's estimate of the cost of the improvements. *Hutton v. Village of Cairo* 342
15. The duty of a city to keep its sidewalks in a reasonable condition for travel by the public is owed to the general public in the city's corporate capacity. *Connolly v. City of Omaha* 380
16. At common law no duty devolved upon an abutting owner to keep the sidewalks adjacent to his property in a safe condition for travel. *Connolly v. City of Omaha* 380
17. The fee of the street is in the city, and the sidewalk is part of the street. It is the duty of the city to keep its sidewalks in repair and in a safe condition for public use. *Connolly v. City of Omaha* 380
18. The liability for failure to perform such duties by a municipality arises by necessary implication from

the privilege of control over the streets granted and is therefore a liability statutory in its nature. *Connolly v. City of Omaha* 380

19. Ownership of adjacent property does not enter into the basis of the liability of a municipality for failure to keep sidewalks in repair. *Connolly v. City of Omaha* 380

20. An accumulation of ice and snow on a sidewalk is a defect and the statute requiring notice applies. *Connolly v. City of Omaha* 380

21. Where the injuries are caused by a defect in or obstruction of a public sidewalk created by the positive misfeasance of the city, the giving of notice to it of the defect or obstruction as prescribed by statute and charter of the city is not a prerequisite to maintaining an action therefor. *Connolly v. City of Omaha* 380

22. Where the injuries are a consequence of a defect in a public sidewalk not caused by any positive negligent act of the city either in its construction or maintenance, the city may not be subjected to liability if there has not been compliance with the requirement of the statute and charter of the city as to notice of the defect. *Connolly v. City of Omaha* 380

23. If a municipal ordinance is inconsistent with a statute of the state, the statute is the superior law and the ordinance is invalid. *State v. Kubik* 509

24. The word inconsistent, as applied to a statute and municipal ordinance, means contradictory in the sense that the statute and ordinance cannot coexist. *State v. Kubik* 509

25. Where property owners have notice and opportunity to be heard on levy of special assessments, they cannot fail to appear and then collaterally maintain an independent suit to restrain collection of the special assessments in the absence of fraud or a substantial jurisdictional defect in the proceedings. *Belza v. Village of Emerson* 651

Negligence.

1. A hotel proprietor is not an insurer against accident to persons invited upon the hotel premises, but he must exercise reasonable care to keep the premises and facilities reasonably safe for the purposes for which they are to be used. *Benedict v. Eppley Hotel Co.* 23

2. Essentials of doctrine of res ipsa loquitur stated. *Benedict v. Eppley Hotel Co.* 23
3. An invitee upon hotel premises injured by the failure of a chair furnished by the hotel is entitled to the benefit of the doctrine of res ipsa loquitur. *Benedict v. Eppley Hotel Co.* 23
4. The fact that an invitee on hotel premises occupied a chair for some time before and at the time of its collapse did not deny the invitee the benefit of the doctrine of res ipsa loquitur. *Benedict v. Eppley Hotel Co.* 23
5. If facts are shown to which the doctrine of res ipsa loquitur has application, an inference of negligence arises and a question is presented for the jury as to liability. *Benedict v. Eppley Hotel Co.* 23
6. A latent defect is one that exists in such manner that discovery of it is impossible by reasonable inspection and care. *Benedict v. Eppley Hotel Co.* 23
7. Where there is no evidence to sustain a finding of contributory negligence, it is error to instruct on the subject and thereby submit to the jury an issue not supported by evidence. *Scott v. Service Pipe Line Co.* 36
8. In a negligence action the burden is on the plaintiff to show that there was a negligent act or omission by the defendant and that it was the proximate cause of plaintiff's injury or a cause which proximately contributed to it. *Brown v. Slack* 142
9. A person who enters a retail store for the purpose of making a purchase is an invited guest within the legal meaning of that term. *Brown v. Slack* 142
10. The customer is a business visitor of a retail store, unless the owner exercises reasonable care to apprise him that the area of invitation is more narrowly restricted. *Brown v. Slack* 142
11. The owner of a retail store is required to maintain it in a reasonably safe condition for customers but he is not an insurer against accidents. *Brown v. Slack* 142
12. What constitutes due care of a business owner is always determined by the circumstances and conditions surrounding the transaction under consideration. *Brown v. Slack* 142
13. In determining whether due care has been exercised, it is proper to consider the uses and purposes for

which the property in question is primarily intended. *Brown v. Slack* 142
14. A customer trading in a self-service retail store has the right to rely upon the safety of passage along passageways used by customers and by doing so is not necessarily guilty of contributory negligence as a matter of law. *Brown v. Slack* 142
15. The violation of traffic regulations is not negligence as a matter of law of any kind or degree, but it is a fact to be considered with the other evidence in the case in deciding an issue of negligence. *Born v. Estate of Matzner* 169
16. In order to recover against host, guest must prove gross negligence and that such negligence was the proximate cause of the injury. *Born v. Estate of Matzner* 169
Ottersberg v. Holz 239
17. Under guest statute, gross negligence means great and excessive negligence or negligence in a very high degree. It indicates the absence of slight care in the performance of a duty. *Born v. Estate of Matzner* 169
Ottersberg v. Holz 239
18. Under guest statute, gross negligence cannot be predicated upon momentary distraction of attention of the operator of motor vehicle by some matter of immediate concern to him. *Ottersberg v. Holz* 239
19. If the evidence respecting gross negligence is not in conflict, the question of its existence is one of law for the court. *Ottersberg v. Holz* 239
20. When the evidence is resolved most favorably towards the existence of gross negligence, and thus the facts are determined, the question of whether or not they support a finding of gross negligence is one of law. *Ottersberg v. Holz* 239
21. In a negligence action, where the plaintiff's negligence is more than slight in comparison with that of the defendant the action should be dismissed. *Rogers v. Shepherd* 292
22. A failure to look and to see that which is in plain sight and in the exercise of ordinary care should have been seen, which if seen would avoid an accident, is as a matter of law more than slight negligence. *Rogers v. Shepherd* 292
23. When separate independent acts of negligence combine to produce a single injury, each defendant involved therein is responsible for the entire re-

sult, even though the negligent act of any one of the defendants alone might not have caused the injury. *Danielsen v. Eickhoff* 374

24. In an action to recover damages caused by alleged negligence, plaintiff must prove both negligence of defendant and that such negligence was the proximate cause of the injury complained of. *Danielsen v. Eickhoff* 374

25. Proximate cause is that cause which in a natural and continuous sequence, unbroken by an efficient intervening cause, produces the injury, and without which the injury would not have occurred. *Danielsen v. Eickhoff* 374
Ricker v. Danner 675

26. Proximate cause is a legal concept with a particular meaning in the law. It does not fall in that class of words or phrases where the meaning is commonly known and understood by the lay public. *Danielsen v. Eickhoff* 374

27. An instruction defining the term proximate cause becomes requisite where some real problem of immediacy of causation is raised in the case. *Danielsen v. Eickhoff* 374

28. The definition of proximate cause has no materiality where, under the facts of the case, the legal causation is clear, obvious, and unmistakable. *Danielsen v. Eickhoff* 374

29. Where the evidence is conflicting and from the facts and circumstances proved reasonable minds might draw different conclusions concerning any negligence or lack of negligence, as well as comparative or contributory negligence, then the trial court should submit such issues to the jury. *Fuss v. Williamson* 525

30. In a case involving issues of negligence, where different minds may draw different conclusions or inferences from the evidence adduced, or, if there is a conflict in the evidence, the matter at issue must be submitted to the jury. *Young v. Stoetzel* 624

31. The stalling of a motor vehicle on a public highway caused by the failure of its mechanism is not negligence, but a failure to use ordinary care and diligence in removing it from the highway within a reasonable time after it is possible to do so is negligence. *Ricker v. Danner* 675

32. An efficient intervening cause is a new and independent force which breaks the causal connection between the original wrong and the injury. The

cause of an injury is that which actually produces it, while the occasion is that which provides an opportunity for the causal agencies to act. *Ricker v. Danner* 675

33. An alleged cause of an accident may sometimes be merely a condition and not the real cause. The activities of inanimate things are usually mere conditions and not causes. *Ricker v. Danner* 675

34. If the negligence of the driver of an automobile in which plaintiff was riding as a passenger was the sole proximate cause of the collision in which plaintiff was injured, he may not recover from a third person for such injury. *Ricker v. Danner* 675

35. Negligence to justify a recovery for damages must have proximately caused or contributed to the injury for which compensation is sought. *Ricker v. Danner* 675

36. It is a general principle, subject to exceptions, that it is negligence for a motorist to drive a motor vehicle on a public highway, at any time, at a speed or in such a manner that it cannot be stopped or its course changed in time to avoid a collision with an obstruction discernible within his range of vision ahead. *Ricker v. Danner* 675

37. The driver of a motor vehicle has a duty to exercise the degree of care and caution which an ordinary prudent person would exercise under similar circumstances. *Fick v. Herman* 758

38. Rule and exceptions stated with reference to duty of motorist driving a motor vehicle on a highway at night. *Fick v. Herman* 758

39. It is the duty of one who constructs an artificial drain with structures therein changing the natural flow of surface water to use reasonable care to maintain the same so that water will not be collected and thrown on another to his damage. *Gable v. Pathfinder Irr. Dist.* 778

40. Where damages are caused in part by an act of God and in part by negligence, the party guilty of negligence may be held only for that part which resulted from the negligence. *Gable v. Pathfinder Irr. Dist.* 778

New Trial.

1. A new trial is to be granted for a legal cause and where it appears that a legal right has been invaded or denied. A new trial is not to be granted for

arbitrary, vague, or fanciful reasons. *Myers v. Platte Valley Public Power & Irr. Dist.* 493
2. It is sufficient to state in a motion for new trial any ground relied upon in the language of the statute. *State v. Kubik* 509
3. Generally a new trial will be granted when a verdict is received in the absence of the judge, or of accused and his sole counsel, unless the irregularity is waived. *Hyslop v. State* 802

Oaths and Affirmations.

One who, by reason of insanity or imbecility, is unable to comprehend the obligation of an oath, or to understand and intelligently answer the questions put by the court upon a voir dire examination, is incompetent to testify as a witness. *Garcia v. State* 571

Officers.

1. In a collateral attack thereon, the law presumes official acts of public officers to have been rightly done and with authority. Acts done, which presuppose the existence of other acts to make them legally effective, are presumptive proof of the existence of such other acts. *School District No. 49 v. School District No. 65-R* 262
2. In the absence of evidence showing misconduct or disregard of law, regularity of official acts is presumed. *School District No. 49 v. School District No. 65-R* 262
3. Unless prohibited by statute, a county board may adopt such means to assist county officers to properly discharge the duties of their offices as in its judgment it shall deem necessary. *Gamboni v. County of Otoe* 417

Parent and Child.

1. A court should not deprive parent of the custody of his child unless the parent is unfit or has forfeited the right to the custody of the child. *Morehouse v. Morehouse* 255
State ex rel. Hamilton v. Boiler 458
2. The custody of a child is to be determined by its best interests with due regard to the superior rights of fit and suitable parents. *Morehouse v. Morehouse* 255
3. In the absence of special circumstances, a child should be awarded to the parent or parents as

against more distant relatives or third persons. *Morehouse v. Morehouse* 255

4. The unfitness which deprives a parent of the right to the custody of his child must be positive and not comparative. The mere fact that the child would be better nurtured or cared for by a stranger is not sufficient to deprive a parent of his right to custody. *Morehouse v. Morehouse* 255

5. The rights of parents to the custody and earnings of their minor children are established by the common law and declared by our statutes. These rights cannot be taken away otherwise than upon due notice and hearing. *Morehouse v. Morehouse* 255

6. Where both natual parents are dead, the custody of a minor child will be determined solely on the basis of what is for the best interests of the child. *State ex rel. Hamilton v. Boiler* 458

7. Where both natural parents are dead, the welfare of the child is the primary consideration to which all other considerations must yield in determining who should be awarded custody of the child. *State ex rel. Hamilton v. Boiler* 458

Partnership.

1. A partnership is a contract by two or more competent persons to place their money, effects, labor, or skill, or some of them, in a lawful trade, profession, or business, and to divide the profit and bear the loss in fixed proportions. *Bard v. Hanson* 563

2. A partner who holds property in his own name which belongs to the partnership will be deemed to hold it in trust for the partnership. *Bard v. Hanson* 563

3. The scope of a partnership may be evidenced by written or oral agreement, or implied from the conduct of the parties and what was done by them. *Bard v. Hanson* 563

Pleading.

1. A general demurrer admits all allegations of fact in the pleading to which it is addressed, which are issuable, relevant, material, and well pleaded; but does not admit the pleader's conclusions of law or fact. *Kinney Loan & Finance Co. v. Sumner* 57

2. A general demurrer tests the substantive legal rights of parties upon admitted facts, including

proper and reasonable inferences of law and fact which may be drawn from facts which are well pleaded. If the petition states facts which entitle the plaintiff to relief, it is not demurrable. *Kinney Loan & Finance Co. v. Sumner* 57

3. In passing on a demurrer to a petition, the court must consider an exhibit attached thereto and made a part thereof, if the allegations stated therein either aid the petition in stating a cause of action or charge facts going to avoid liability. *Kinney Loan & Finance Co. v. Sumner* 57

4. The Supreme Court will not ordinarily disturb a decision of the district court in determining whether or not good cause has been shown for the failure of a party to plead within the time required. *Jensen v. Omaha Public Power Dist.* 277

5. In an eminent domain proceeding, the district court did not abuse its judicial discretion in striking affidavits from the files under circumstances recited. *Jensen v. Omaha Public Power Dist.* 277

6. The allegations of a pleading are always in evidence for all purposes of the trial. They may be used for any legitimate purpose. *Barkalow Bros. Co. v. English* 407

7. A party may invoke the language of the pleading of his adversary on a particular issue on which the case is tried as rendering certain facts indisputable. In doing this he is neither required nor permitted to offer the pleading in evidence. *Barkalow Bros. Co. v. English* 407
Rodgers v. Jorgensen 485

8. An admission made in a pleading on which the trial is had is more than an ordinary admission. It is a judicial admission. It is not a means of evidence, but a waiver of all controversy, so far as the adverse party desires to take advantage of it, and is therefore a limitation of the issues. *Barkalow Bros. Co. v. English* 407

9. The power of the Supreme Court to permit a pleading to be amended is ordinarily exercised to sustain a judgment and not to reverse it, unless the refusal to allow the amendment would permit a miscarriage of justice. *Barkalow Bros. Co. v. English* 407

10. Where the petition of a plaintiff shows apparent laches on its face, he must generally account for and

excuse his delay by proper pleading and proof. *Watson Bros. Transp. Co. v. Red Ball Transf. Co.* 448

11. An action in quantum meruit may be joined in a petition with an action on an express contract, and a judgment based on either will satisfy the liability as to both claims where they have their origin in the same transaction. *Rodgers v. Jorgensen* 485

12. The character of a cause of action is determined by the allegations of fact contained in the petition, unaffected by the conclusions of the pleader. *Svoboda v. De Wald* 594

13. Under the code system of pleading, it is not necessary to state a cause of action or defense in any particular form. The facts are to be stated. All that the law requires is that there shall be a cause of action or defense. *Svoboda v. De Wald* 594

14. Failure or refusal of complainant to comply with a proper order of the State Railway Commission with respect to the amendment of a complaint may be a valid ground for a dismissal of the proceeding. *Petersen & Petersen v. West Nebraska Express* 629

15. An order of the State Railway Commission requiring a complainant to allege facts showing whether or not shipments of commodities were in interstate or intrastate commerce is not unreasonable when the jurisdiction of the commission is dependent thereon. *Petersen & Petersen v. West Nebraska Express* 629

16. The office of the ad damnum in a pleading is to fix the amount beyond which a party may not recover on the trial of the action. *Gable v Pathfinder Irr. Dist.* 778

17. As a general rule an amendment may be made to a pleading at any stage of the proceedings which does not change the quantum of proof as to a material fact. *Gable v. Pathfinder Irr. Dist.* 778

Principal and Agent.

Notice to or knowledge by an agent is imputed to his principal in those cases only in which it is the agent's duty to act upon it or to communicate it to his employer, and where it has a direct relation to the act or business which the agent is employed to do. *Selig v. Wunderlich Contracting Co.* 46

Process.

1. The provisions of the Juvenile Court Act for issuance and service of process are jurisdictional. *State v. Andersen* 601
2. In the absence of the issuance and service of process, or a waiver thereof, an order committing a child to the industrial school is void for want of jurisdiction. *State v. Andersen* 601

Public Lands.

1. The provision of the Enabling Act making the grant of public school lands, and of the Constitution of 1866 designating the lands, and the subsequent act admitting the state into the Union under the Constitution, constituted a contract between the state and the national government with regard to such grant. *State ex rel. Ebke v. Board of Educational Lands & Funds* 79
2. The title to the state school lands was vested in the state upon an express trust for the support of common schools without right or power of the state to use, dispose of, or alienate the lands or any part thereof except as allowed by the Enabling Act and the Constitution. *State ex rel. Ebke v. Board of Educational Lands & Funds* 79
3. The public school lands are a trust held by the state, and by constitutional provision are in the control of the Board of Educational Lands and Funds, which board is subject to control by the Legislature within constitutional limitations. *State ex rel. Ebke v. Board of Educational Lands & Funds* 79
4. The public school lands are held in trust for educational purposes by the terms of Article VII, section 9, of the Constitution of this state. *State ex rel. Ebke v. Board of Educational Lands & Funds* 79
5. As a trustee of the public school lands and the income derived therefrom, the state is required to administer the trust estate under the rules of law applicable to trustees acting in a fiduciary capacity. *State ex rel. Ebke v. Board of Educational Lands & Funds* 79
6. Litigant was not entitled to an allowance for attorney's fees and expenses of the litigation to be paid out of trust fund, where administrative and independent action of Board of Educational Lands and Funds caused the accrual to and augmentation of

the trust fund. *State ex rel. Ebke v. Board of Educational Lands & Funds* 79

7. Where litigation is conducted solely for the benefit of a litigant and not for the benefit of the school lands trust fund and the litigant is not a beneficiary of the trust fund, such litigant is not entitled to have attorney's fees and expenses of litigation paid out of the trust fund. *State ex rel. Ebke v. Board of Educational Lands & Funds* 79

8. Anyone dealing with school lands does so with knowledge of and subject to the trust obligations of the state and the legislative grant of power as to terms and conditions of the lease. The law enters into and becomes a part of the contract. *Jessen v. Blackard* 103

9. A review is authorized in the district court by petition in error of final orders such as appraisements of improvements on school lands by county commissioners or supervisors acting as a quasi-judicial tribunal. *Jessen v. Blackard* 103

10. The final action of an administrative tribunal created by statute, where it has jurisdiction of the subject matter and the parties, is conclusive unless reversed or modified in the mode provided by law. *Jessen v. Blackard* 103

Public Service Commissions.

1. The State Railway Commission has jurisdiction and authority to suspend, change, or revoke a certificate of convenience and necessity in whole or in part if in so doing it proceeds in conformity with applicable statutes. *Schmunk v. West Nebraska Express* 134

2. Unless an order of the State Railway Commission is shown to be unreasonable or abitrary, the Supreme Court is not authorized to interfere with the power of the commission to regulate common carriers. *Schmunk v. West Nebraska Express* 134

3. An order of the State Railway Commission is not unreasonable or arbitrary where there is competent evidence to sustain a finding of willful failure to comply with a lawful order of the commission or with a lawful condition of a certificate of convenience and necessity. *Schmunk v. West Nebraska Express* 134

4. The term "willful failure," as used in the Motor Carrier Act, is such behavior through acts of com-

mission or omission justifying a belief that there was an intent entering into and characterizing the failure of which complaint is made. *Schmunk v. West Nebraska Express* 134

5. The grant or denial of a certificate of convenience and necessity by the State Railway Commission requires the exercise of administrative and legislative functions and not of judicial powers. *Schmunk v. West Nebraska Express* 134

6. The burden is on an applicant for a certificate of convenience and necessity to show that the operation under the certificate is and will be required by the present or future public convenience and necessity. *Schmunk v. West Nebraska Express* 134

7. In determining the issue of public convenience and necessity, controlling questions are whether the operation will serve a useful purpose responsive to a public need; whether this purpose can or will be served as well by existing carriers; and whether it can be served by applicant without endangering or impairing the operations of existing carriers contrary to public interest. *Schmunk v. West Nebraska Express* 134

8. The question of the adequacy of service of existing carriers is implicit in determining whether or not convenience and necessity demand the service of an additional carrier in the field. The existence of an adequate and satisfactory service by carriers already in the area is complete negation of a public need and demand for added service by another carrier. *Schmunk v. West Nebraska Express* 134

9. Essential issue presented by an application by a motor carrier to operate over an alternate route stated. *West Nebraska Express v. Pirnie* 353

10. Public convenience and necessity may be found in operating economies and those things which contribute to expedition, public safety, efficiency, and convenience in operation. *West Nebraska Express v. Pirnie* 353

11. The term public interest as used in the Motor Carrier Act has direct relation to adequacy of transportation service, to its essential conditions of economy and efficiency, and to appropriate provision for and the best use of transportation facilities. *West Nebraska Express v. Pirnie* 353

12. In an appeal from an order of the State Railway Commission, question for review is whether the

order is or is not unreasonable or arbitrary. *West Nebraska Express v. Pirnie* 353

13. An order of the State Railway Commission, acting within its jurisdiction, which has competent evidence to support it is not unreasonable or arbitrary. *West Nebraska Express v. Pirnie* 353

14. Appeals from orders of the State Railway Commission are special and control general statutory provisions. *Doher v. Herman* 438

15. The procedure to be followed in perfecting an appeal directly to the Supreme Court from the State Railway Commission is governed by the same provisions in force with reference to appeals from the district courts, except as otherwise specifically provided. *Doher v. Herman* 438

16. Any order of the State Railway Commission is reviewable which meets the conditions set forth in the statutes and which involves a justiciable issue that is decisive of some subject matter of which the commission has jurisdiction and the power to enforce against any party to the proceeding. *Doher v. Herman* 438

17. Any action by or order of the State Railway Commission which is merely procedural or interlocutory in character is not the kind and type of order from which an appeal can be taken directly to the Supreme Court. *Doher v. Herman* 438

18. Courts should review or interfere with administrative and legislative action of the State Railway Commission only so far as it is necessary to keep it within its jurisdiction and protect legal and constitutional rights. *Watson Bros. Transp. Co. v. Red Ball Transf. Co.* 448

19. The rules relating to nunc pro tunc orders are generally applicable to administrative and quasi-judicial commissions. *Watson Bros. Transp. Co. v. Red Ball Transf. Co.* 448

20. On appeal to the Supreme Court from an order of the State Railway Commission, while acting within its jurisdiction, the question for determination is the sufficiency of the evidence to prove that the order is not unreasonable or arbitrary. *Watson Bros. Transp. Co. v. Red Ball Transf. Co.* 448

21. Failure or refusal of complainant to comply with a proper order of the State Railway Commission with respect to the amendment of a complaint

may be a valid ground for a dismissal of the proceeding. *Petersen & Petersen v. West Nebraska Express* 629

22. An order of the State Railway Commission requiring a complainant to allege facts showing whether or not shipments of commodities were in interstate or intrastate commerce is not unreasonable when the jurisdiction of the commission is dependent thereon. *Petersen & Petersen v. West Nebraska Express* 629

Quo Warranto.

An adequate remedy for the settlement of the rights of parties in election cases has been provided by either contest or quo warranto and these remedies are exclusive. *School District No. 49 v. School District No. 65-R* 262

Records.

The omission from the record of items not specifically required to be recorded is not a fatal defect. *School District No. 49 v. School District No. 65-R* 262

Reformation of Instruments.

A deed to real estate may be impeached by either party thereto for fraud or mistake, and parol testimony is competent to reform it so as to make it recite the actual agreement between the parties. *Ingraham v. Hunt* 725

Replevin.

1. The burden is on the plaintiff in a replevin action to prove by a preponderance of the evidence that at the time of the commencement of the action he was the owner of the property sought to be replevied, that he was entitled to the immediate possession of it, and that the defendant wrongfully detained it. *State Farm Mutual Auto Ins. Co. v. Drawbaugh* 149
2. A plaintiff in a replevin action must recover on the strength of his right in or to the property and not upon any weakness of the interest of the defendant therein. *State Farm Mutual Auto Ins. Co. v. Drawbaugh* 149
3. A plaintiff in a replevin action must prove the title as he pleads it. *State Farm Mutual Auto Ins. Co. v. Drawbaugh* 149

4. Any fact that transpires after the date of the institution of a replevin action is immaterial in the consideration and determination of the merits of the case. *State Farm Mutual Auto Ins. Co. v. Drawbaugh* 149

Schools and School Districts.

1. A municipality may within the limitation of its legal powers be estopped by its official acquiescence in an approval of acts originally unauthorized. *School District No. 49 v. School District No. 65-R* 262
2. Part of statute authorizing Superintendent of Public Instruction to formulate rules and regulations for approval of high schools, without standards having been prescribed by Legislature, was unconstitutional. *School District No. 39 v. Decker* 693
3. Rule promulgated by Superintendent of Public Instruction under authority granted by unconstitutional statute was invalid and unenforceable. *School District No. 39 v. Decker* 693

Specific Performance.

Nothing will be considered as part performance which does not put the party asserting it in a situation amounting to a fraud upon him unless the oral agreement be fully performed. Equity interferes in such cases only to prevent fraud or unconscionable advantage. *Eagan v. Hall* 537

Statutes.

1. Statutes in pari materia should be construed together, and, if possible, effect be given to all of their provisions. *State Farm Mutual Auto Ins. Co. v. Drawbaugh* 149
2. In the absence of constitutional restraint on the legislative power, courts have no power to interfere with action resting in the legislative discretion. Any wrong must be righted through the ballot box. *School District No. 49 v. School District No. 65-R* 262
3. A statute may adopt a part or all of another statute by a specific and descriptive reference thereto. The effect is the same as if the statute or part thereof adopted had been written into the adopting statute. *Jensen v. Omaha Public Power Dist.* 277
4. Where a statute is susceptible of two constructions,

one of which will render it constitutional and the other unconstitutional, it is the duty of a court to adopt the construction which, without doing violence to the fair meaning of the statute, will render it constitutional. *Jensen v. Omaha Public Power Dist.* 277

5. The constitutional provision as to the manner of setting forth amendatory legislation has no application to an act complete in itself and not in effect amendatory, even though it may modify or destroy the effect of previous legislation. *Jensen v. Omaha Public Power Dist.* 277

6. In the interpretation of a statute it will be presumed that the Legislature inserted every part thereof for a purpose, and effect will therefore be given, if possible, to every word, clause, and sentence in the act. *Boyd Motor Co. v. County of Box Butte* 514

7. In the consideration and application of a statute effect should be given, if possible, to all of its parts and nothing should be avoided. The subject of the enactment and the language thereof in its plain, ordinary, and popular sense should be considered to determine the legislative will. *State v. Luttrell* 641

8. It is the duty of a court, so far as practicable, to give effect to the entire language of a statute and to reconcile the different provisions of it so they are consistent, harmonious, and sensible. *State v. Luttrell* 641

9. By statute, the maximum weight that may lawfully be imposed on the highway by any 2 or more consecutive axles of a vehicle or a combination of vehicles if the distance between the extreme axles of the 2 or more consecutive axles is 22 feet or less may not exceed that stated for the respective distance in the table which is a part of the statute. *State v. Luttrell* 641

10. The word "group" in the statute imposing limitation on weight of motor vehicle and load means any 2 or more consecutive axles of a vehicle or combination of vehicles where the distance between the extreme axles of the 2 or more consecutive axles is 22 feet or less. *State v. Luttrell* 641

11. Statute imposing limitation on weight of motor vehicle and load permitted on highway was not vague, uncertain, or ambiguous. *State v. Luttrell* 641

12. The Fair Trade Act is not violative of the Constitution of the United States but is violative of the Sherman Anti-Trust Act. *McGraw Electric Co. v. Lewis & Smith Drug Co., Inc.* 703
13. The Fair Trade Act is unconstitutional for the reason that it grants special privileges and immunities. *McGraw Electric Co. v. Lewis & Smith Drug Co., Inc.* 703
14. The Fair Trade Act is unconstitutional for the reason that, within constitutional meaning, it deprives of liberty and property without due process of law. *McGraw Electric Co. v. Lewis & Smith Drug Co., Inc.* 703
15. The Fair Trade Act is unconstitutional for the reason that it confers upon persons the power to fix and enforce prices of merchandise without impositions of standards therefor. *McGraw Electric Co. v. Lewis & Smith Drug Co., Inc.* 703
16. The Fair Trade Act is unconstitutional for the reason that there is an absence of anything apparent in the act or its title indicating that the purpose of the section is in the public interest. *McGraw Electric Co. v. Lewis & Smith Drug Co., Inc.* 703
17. The question of whether or not legislation is in the public interest is ordinarily one for legislative determination, but the Legislature may not, under the guise of regulation, in the public interest, impose conditions which are on their face unreasonable, arbitrary, discriminatory, or confiscatory. *McGraw Electric Co. v. Lewis & Smith Drug Co., Inc.* 703
18. The Legislature may not constitutionally, under the guise of public interest, grant power without control or check, which may be exercised at will, with or without reason, arbitrarily or capriciously. *McGraw Electric Co. v. Lewis & Smith Drug Co., Inc.* 703
19. If an unconstitutional section of an act was an inducement to the passage of an entire act, the entire act is unconstitutional. *McGraw Electric Co. v. Lewis & Smith Drug Co., Inc.* 703
20. If an act as originally passed was unconstitutional because it contained matter different from that expressed in the title, or referred to more than one subject matter, it becomes valid law, if otherwise constitutional, on adoption by the Legislature and incorporation into a general revision without ref-

erence to title as originally enacted. *McGraw Electric Co. v. Lewis & Smith Drug Co., Inc.* 703

21. An act invalid before inclusion in a revision by reason of the fact that it was induced by an unconstitutional section of the act remains invalid and is not aided or revived by incorporation into an authorized revision. *McGraw Electric Co. v. Lewis & Smith Drug Co., Inc.* 703

22. An unconstitutional statute is a nullity, is void from is enactment, and is incapable of creating any rights or obligations. *Watkins v. Dodson* 745

Taxation.

1. A resident taxpayer, as such, and without proof of peculiar interest or injury to himself, may enjoin the illegal expenditure of money by a public board or officer. *Niklaus v. Miller* 301

2. The presumption obtains that a board of equalization has faithfully performed its offical duties, and that in making an assessment it acted upon sufficient competent evidence to justify its action. *Watson Industries v. County of Dodge* 311

3. In case of an appeal by a taxpayer from the action of a board of equalization in fixing the value of property for taxation, the burden is upon the appellant to show that the action of the board is erroneous. *Watson Industries v. County of Dodge* 311

4. The presumption that a board of equalization acted regularly disappears when there is competent evidence on appeal to the contrary. The reasonableness of the valuation fixed by the board then becomes one of fact based upon evidence, unaided by presumption, with the burden of showing such value to be unreasonable resting upon the taxpayer. *Watson Industries v. County of Dodge* 311

5. Owners of property are given the right by statute to make objections to a proposed improvement where their property might become subject to assessment for the contemplated improvement. *Hutton v. Village of Cairo* 342

6. The right to object is one which is attached to the ownership of property which might become subject to assessment. *Hutton v. Village of Cairo* 342

7. The right to object is not one which continues after the property owner interest is no longer involved. *Hutton v. Village of Cairo* 342

8. Resolution of necessity is required to state the

outer boundaries of the district or districts in which it is proposed to make special assessments. *Hutton v. Village of Cairo* 342

9. Amendments to the resolution of necessity are authorized and contemplated. *Hutton v. Village of Cairo* 342

10. Published notice to contractors is required to state the amount of the engineer's estimate of the cost of the improvements. *Hutton v. Village of Cairo* 342

11. If a tax or assessment is levied without authority of law, it is void. *Gamboni v. County of Otoe* 417

12. When taxes are levied on property without authority of law, a court of equity may enjoin collection thereof. *Gamboni v. County of Otoe* 417

13. Statutory provision requiring notice to the landowner of any increase in assessed value of his realty over the last previous assessment is mandatory. A tax levied on such increase, made without notice to the owner, is void. *Gamboni v. County of Otoe* 417

14. What has been said of the notice required by statute being mandatory is equally applicable to what the Legislature has said shall be contained therein. *Gamboni v. County of Otoe* 417

15. The notice to an owner of property is not required in cases where additional improvements have been made since the last assessment. *Gamboni v. County of Otoe* 417

16. The valuation of property made by the proper assessing officer is presumed to be correct. *Gamboni v. County of Otoe* 417

17. The presumption is that, when an officer or assessing body values property for assessment purposes, he acts fairly and impartially in fixing such valuation. *Gamboni v. County of Otoe* 417

18. Where the assessor does not make a personal inspection of the properties but accepts the valuations thereof fixed by a professional appraiser, the presumption in favor of the assessment does not obtain. However, the burden in such case is still upon the protesting party to prove the assessment is excessive. *Gamboni v. County of Otoe* 417

19. The presumption obtains that a board of equalization has faithfully performed its official duties, and that in making an assessment it acted upon sufficient competent evidence to justify its action. *Gamboni v. County of Otoe* 417

20. The statute affords a plain, adequate, and speedy remedy to one whose property has been excessively valued for taxation and in cases in which the county board of equalization has committed prejudicial errors or irregularities in procedure. *Gamboni v. County of Otoe* 417
21. Motor vehicles not subject to a motor vehicle tax, including dealers' motor vehicles not registered for operation on the highways, are subject to an ad valorem tax computed according to the schedule of values fixed by the State Board of Equalization and Assessment. *Boyd Motor Co. v. County of Box Butte* 514
22. The effect of statute on taxation of motor vehicles is to provide that after a dealer's stock of motor vehicles has been valued in accordance with the schedule of values fixed by the State Board of Equalization and Assessment, the assessment and levy of the tax will be made in the same manner and in the same proportion of actual value as other merchandise. *Boyd Motor Co. v. County of Box Butte* 514
23. Levy of taxes on shares of bank stock in excess of four mills on the dollar violated rule of uniformity as to class required by the Constitution and was to that extent unenforceable. *Omaha Nat. Bank v. Heintze* 520
24. Power of court of general jurisdiction to foreclose tax liens is not limited by statute defining nature and extent of title passing to purchaser. *County of Scotts Bluff v. Bristol* 634
25. Where property owners have notice and opportunity to be heard on levy of special assessments, they cannot fail to appear and then collaterally maintain an independent suit to restrain collection of the special assessments in the absence of fraud or a substantial jurisdictional defect in the proceedings. *Belza v. Village of Emerson* 651

Tenancy in Common.

1. Either a joint tenancy or a tenancy in common may exist with relation to personal property. Either of such relationships may be created by act of the parties. A tenancy in common may, under proper circumstances, be the product of error, failure, or mistake in an attempt to create a joint tenancy. *Whiteside v. Whiteside* 362

2. Essential elements of tenancy in common stated. *Whiteside v. Whiteside* 362
3. Party claiming interest in property as a tenant in common has burden of alleging and proving it. However, a transfer or conveyance of property to two or more persons may raise a presumption thereof. *Whiteside v. Whiteside* 362

Trial.

1. Rule for consideration of motion for directed verdict stated. *Vocke v. Thomas* 7
Selig v. Wunderlich Contracting Co. 46
Fuss v. Williamson 525
Fick v. Herman 758
Gable v. Pathfinder Irr. Dist. 778
2. It is error for the court to direct a verdict or to render judgment notwithstanding the verdict where the evidence is conflicting. *Vocke v. Thomas* 7
3. It is the duty of the trial court, without request, to instruct the jury on each issue presented by the pleadings and supported by evidence. *Benedict v. Eppley Hotel Co.* 23
Oliver v. Oliver 218
Platte Valley Public Power & Irr. Dist. v. Armstrong 609
4. It is the duty of the trial court to instruct the jury fully and fairly as to items of damage it should consider in arriving at its verdict and as to the proper basis upon which damage should be assessed for each item. *Benedict v. Eppley Hotel Co.* 23
5. Where there is no evidence to sustain a finding of contributory negligence, it is error to instruct on the subject and thereby submit to the jury an issue not supported by evidence. *Scott v. Service Pipe Line Co.* 36
6. The trial court is required to consider any competent and relevant facts revealed by a view of the premises as evidence in the case. The Supreme Court on review of findings made by the trial court will give consideration to the fact that the trial court did view the premises if the record contains competent evidence to support the findings. *Mader v. Mettenbrink* 118
7. In stating the issues to the jury it is error, which may be prejudicial, for the trial court to include allegations of which there is no proof. *Oliver v. Oliver* 218

8. On motion for directed verdict, plaintiff is entitled to have every controverted fact resolved in his favor and to have the benefit of every inference which can be reasonably deduced from the evidence. *Rogers v. Shepherd* 292
9. Exhibits which are introduced in evidence in a case, or excluded therefrom, must be brought before the reviewing court in the record if the action of the lower court is to be reviewed. *State v. Allen* 314
10. Affidavits used on a hearing cannot be considered in the appellate court unless preserved by a bill of exceptions. *State v. Allen* 314
11. An instruction defining the term proximate cause becomes requisite where some real problem of immediacy of causation is raised in the case. *Danielsen v. Eickhoff* 374
12. The definition of proximate cause has no materiality where, under the facts of the case, the legal causation is clear, obvious, and unmistakable. *Danielsen v. Eickhoff* 374
13. To render the failure to give an instruction prejudicially erroneous, it is not sufficient that correct abstract propositions of law are therein embodied, but in addition it is requisite that such propositions be applicable to facts, at least in some degree, inferable from the evidence. *Bell v. State* 474
Nelsen v. State 663
14. An instruction which submits an issue to the jury not raised or supported by the evidence is erroneous and should be refused. *Bell v. State* 474
15. An instruction should be refused which, in addition to a correct statement of the law, contains an assumption of the existence of a material fact upon which there was no evidence offered or received, and directs the attention of the jury to and unduly emphasizes a part of the evidence. *Bell v. State* 474
16. It is not error to refuse to give requested instructions which have no application or relevancy to the evidence adduced in the case, or which erroneously state the applicable principles of law, or where, in the light of all the instructions given, their refusal was not prejudicial to the defendant. *Bell v. State* 474
17. Instructions to a jury must be considered together, so that they may be properly understood, and, if as a whole they fairly state the law applicable

to the evidence when so construed, error cannot be predicated on the giving thereof. *Bell v. State* 474

18. Misdirection of a jury does not require that a judgment shall be set aside unless there is a substantial miscarriage of justice. *Bell v. State* 474

19. The Supreme Court is not vested with authority to set aside the verdict of a jury, having for its support sufficient competent evidence, even though the court may be of the opinion that had it been the trier of the case, it would have reached a different conclusion. *Myers v. Platte Valley Public Power & Irr. Dist.* 493

20. While the trial judge need not give his reason for reaching a decision, the justification of the decision must be one that can be established from the record. *Myers v. Platte Valley Public Power & Irr. Dist.* 493

21. Where a party has sustained the burden and expense of a trial and has succeeded in securing the verdict of a jury on the facts in issue, he has a right to keep the benefit of that verdict unless there is prejudicial error in the proceedings by which it was secured. *Myers v. Platte Valley Public Power & Irr. Dist.* 493

22. Instructions not complained of in such a way as to be reviewable in the Supreme Court will be taken as the law of the case. If, when tested by such instructions, the verdict is not vulnerable to the objections lodged against it, the assignments will not be sustained. *Myers v. Platte Valley Public Power & Irr. Dist.* 493

23. It is presumed that a jury followed the instructions given in arriving at its verdict and, unless it affirmatively appears to the contrary, it cannot be said that such instructions were disregarded. *Myers v. Platte Valley Power & Irr. Dist.* 493

24. Where there is no proper or adequate showing that the verdict of a jury resulted through passion, bias, or prejudice, the verdict of the jury will not be disturbed on appeal. *Myers v. Platte Valley Public Power & Irr. Dist.* 493

25. When the evidence is conflicting, the verdict of the jury will not be set aside unless it is clearly wrong. *Myers v. Platte Valley Public Power & Irr. Dist.* 493

26. The trial court should submit to the jury only such issues as find some support in the evidence. Where an issue is submitted without support in the evidence and is calculated to mislead the jury in the

consideration of the facts to the prejudice of the complaining party, the judgment must be reversed. *Fuss v. Williamson* 525

27. The proof in a trial of a jury case must be confined to legal evidence tending to prove or disprove an issue made by the pleadings and the admission of improper evidence is prejudicial if it may have influenced the verdict. *Higgins v. Loup River Public Power Dist.* 549

28. The credibility of the witnesses and the weight of their testimony is for the jury to decide. *Garcia v. State* 571

29. The mere fact that a witness in a criminal prosecution is a regular public law enforcement officer does not entitle an accused to an instruction that the jury, in weighing his testimony, should exercise greater care than in weighing the testimony of other witnesses. *Garcia v. State* 571

30. Where informers, detectives, or other persons employed to hunt up testimony against the accused are called to testify against him, he is entitled to an instruction that in weighing their testimony greater care should be exercised than in the case of witnesses who are wholly disinterested. *Garcia v. State* 571

31. Trial judges and public prosecutors are charged with the duty of conducting criminal trials in such a manner that the accused may have a fair and impartial trial, uninfluenced by prejudice, passion, and public clamor. *Garcia v. State* 571

32. Prosecutors should handle all prosecutions without bias or prejudice as between the public and the defendant. *Garcia v. State* 571

33. It is the duty of the prosecuting attorney to conduct the trial in such a manner as will be fair and impartial to the rights of the accused; and this rule applies to special counsel assisting the prosecuting attorney. *Garcia v. State* 571

34. The question of competency of a person to be a witness must be left to the sound legal discretion of the trial judge, leaving to the jury to determine the credit that ought to be given to the testimony. *Garcia v. State* 571

35. A purpose to kill and malice are material elements of murder in the second degree and, under a charge therefor, the burden is on the state to prove both beyond a reasonable doubt. *Woodard v. State* 603

36. Where the evidence does not prove a higher grade of homicide than manslaughter it may be prejudicial error to submit to the jury the issue of murder in the second degree, even though the trial results in acquitting accused of the graver offense and in finding him guilty of the lesser. *Woodard v. State* 603
37. Where the evidence and circumstances of the crime are such that different conclusions may properly be drawn therefrom as to the degree, the trial court is without error in submitting the different degrees to the jury for its determination. *Woodard v. State* 603
38. The law implies malice in cases of homicide if the killing alone is shown, but, if the circumstances attending the homicide are fully testified to by eyewitnesses, it is error to instruct the jury that there is a presumption of malice from the fact of the killing. *Woodard v. State* 603
39. Where a jury is permitted to view the premises involved in eminent domain litigation, the result of its observations is evidence which, in arriving at a verdict, it may consider only in connection with other competent evidence. *Platte Valley Public Power & Irr. Dist. v. Armstrong* 609
40. Condemnee must establish the elements of damages to growing crops by a preponderance of competent evidence. The proof of damages must be such as to take it out of the realm of speculation. *Platte Valley Public Power & Irr. Dist. v. Armstrong* 609
41. A jury should be fully and fairly informed as to the various items of damages which it should take into consideration in arriving at its verdict. In this respect it is the duty of the trial court to instruct as to the proper basis upon which damages are to be assessed for each such item. *Platte Valley Public Power & Irr. Dist. v. Armstrong* 609
42. Ordinarily in a condemnation proceeding it is a question of law whether or not the property involved constitutes one contiguous unit or tract, but where the doubt is factual, depending on conflicting evidence or on different views of the evidence, the court should submit the question to the jury under proper instructions. *Platte Valley Public Power & Irr. Dist. v. Armstrong* 609
43. Where the property involved is one contiguous tract or unit, in estimating the damages occasioned

by the appropriation of a part thereof for public use, the injury to the property remaining as well as the market value of the property actually taken should be considered, although the petition filed by the condemner for the appointment of appraisers only describes the property taken. *Platte Valley Public Power & Irr. Dist. v. Armstrong* 609

44. A litigant is entitled to have the jury instructed as to his theory of the case as shown by pleading and evidence, and a failure to do so is prejudicial error. *Platte Valley Public Power & Irr. Dist. v. Armstrong* 609

45. The purpose of an instruction is to furnish guidance to the jury in its deliberations, and to aid it in arriving at a proper verdict; and, with this end in view, it should state clearly and concisely the issues of fact and the principles of law which are necessary to enable it to accomplish the purpose desired. *Platte Valley Public Power & Irr. Dist. v. Armstrong* 609

46. When a motion for a directed verdict is made, the party against whom it is directed is entitled to have his evidence accepted as true and to have all favorable inferences reasonably to be drawn therefrom resolved in his favor. *Young v. Stoetzel* 624

47. In a case involving issues of negligence, where different minds may draw different conclusions or inferences from the evidence adduced, or, if there is a conflict in the evidence, the matter at issue must be submitted to the jury. *Young v. Stoetzel* 624

48. In order for physical facts to be sufficient to warrant a directed verdict in an automobile collision case, they must conclusively demonstrate that the collision out of which the injuries arose was not caused by any negligence on the part of the party making the motion. *Young v. Stoetzel* 624

49. Where there is a reasonable dispute as to what the physical facts show, the conclusions to be drawn therefrom are for the jury. *Young v. Stoetzel* 624

50. It is not prejudicial error for the trial court to fail or refuse to give an instruction to a jury on the maxim, "He who speaks falsely on one point will speak falsely upon all." *Nelsen v. State* 663

51. A motion for a directed verdict challenges the right of the party against whom it is directed to recover in any amount. *Comstock v. Evans* 739

52. Court has preliminary question to decide of whether there is any evidence upon which a jury can properly find a verdict. *Fick v. Herman* 758
53. It is reversible error for the trial court to include in its instructions allegations of fact found in the pleadings which have not been supported by the evidence. *Fick v. Herman* 758
54. An instruction that it is the duty of the driver of a motor vehicle to avoid a collision if possible is prejudicially erroneous. Such an instruction places too great a duty upon the driver of the motor vehicle. *Fick v. Herman* 758
55. Instructions should be confined to the issues raised by the pleadings and the evidence in support thereof. *Gable v. Pathfinder Irr. Dist.* 778
56. Where the record in a criminal prosecution discloses that the defendant was present during the trial, but is silent as to whether he was present when the verdict was received, it will be presumed that the verdict was properly received and that the defendant was present in court at the time. *Hyslop v. State* 802
57. Verdicts in criminal cases should be certain and import a definite meaning free from ambiguity. However, if the meaning of the verdict in the light of the whole record is clear, it is sufficient. *Hyslop v. State* 802
58. Unless the record discloses an objection or an exception to remarks of a trial judge, a complaint with regard thereto cannot be reviewed on appeal. *Hyslop v. State* 802
59. If the court has instructed the jury generally on the law of the case and has not withdrawn any essential issue from consideration of the jury, error cannot be predicated on failure to charge on some particular phase of the case unless a proper instruction has been requested by the party complaining. *Cox v. State* 811
60. The failure of the court to give an instruction relative to evidence introduced to prove good character is not reversible error in the absence of a proffered instruction stating the law in relation thereto. *Cox v. State* 811

Trusts.

1. The title to the state school lands was vested in the state upon an express trust for the support of

common schools without right or power of the state to use, dispose of, or alienate the lands or any part thereof except as allowed by the Enabling Act and the Constitution. *State ex rel. Ebke v. Board of Educational Lands & Funds* 79

2. The public school lands are a trust held by the state, and by constitutional provision are in the control of the Board of Educational Lands and Funds, which board is subject to control by the Legislature within constitutional limitations. *State ex rel. Ebke v. Board of Educational Lands & Funds* 79

3. The public school lands are held in trust for educational purposes by the terms of Article VII, section 9, of the Constitution of this state. *State ex rel. Ebke v. Board of Educational Lands & Funds* 79

4. As a trustee of the public school lands and the income derived therefrom, the state is required to administer the trust estate under the rules of law applicable to trustees acting in a fiduciary capacity. *State ex rel. Ebke v. Board of Educational Lands & Funds* 79

5. Anyone dealing with school lands does so with knowledge of and subject to the trust obligations of the state and the legislative grant of power as to the terms and conditions of the lease. The law enters into and becomes a part of the contract. *Jessen v. Blackard* 103

6. Where during the existence of the widow's life interest property is held by a testamentary trustee under specified conditions, the remaindermen may not object to the trustee's report in the absence of a claimed breach of trust by the trustee affecting the beneficial interest of such remaindermen. *Lund v. Rubeck* 335

Usury.

1. The phrase "a regulatory small loan law similar in principle to this act" means a law resembling our own Installment Loan Act in origin, purpose, and result, which licenses, controls, and regulates those engaged in loaning money at conventional higher rates of interest in order to combat the reservation of extortionate and oppressive rates. *Kinney Loan & Finance Co v. Sumner* 57

2. The Installment Loan Act comprehensively defines the public policy of this state with regard to en-

forceability here of loans lawfully made and to be performed outside this state. *Kinney Loan & Finance Co. v. Sumner* 57

Waiver.

Waiver is a voluntary and intentional relinquishment, surrender, or abandonment of a known existing legal right, or such conduct as warrants an inference of the relinquishment of such right or the intentional doing of an act inconsistent with claiming it. *Jessen v. Blackard* 103

Waters.

1. A watercourse must be a stream in fact, as distinguished from mere surface drainage, but the flow of water need not be continuous. *Mader v. Mettenbrink* 118
2. Surface water is that which is diffused over the surface of the ground, derived from falling rains or melting snows, and continues to be such until it reaches some well-defined channel. It then becomes the running water of a stream and ceases to be surface water. *Mader v. Mettenbrink* 118
3. Where surface water flows in a well-defined course, whether it be a ditch, swale, or draw in its primitive condition, its flow cannot be arrested or interfered with by a landowner to the injury of neighboring proprietors. *Mader v. Mettenbrink* 118
4. It is the duty of those who build structures across natural drainways to provide for the natural passage of all waters which may be reasonably anticipated to drain there. This is a continuing duty. *Mader v. Mettenbrink* 118
5. The term "surface water" includes such as is carried off by surface drainage, that is, drainage independent of a watercourse. *Mader v. Mettenbrink* 118
6. A proprietor may defend himself against the encroachments of surface water and will not be liable in damages therefrom if, in making defense on his own land, he exercised ordinary care and used his own property so as not to unnecessarily and negligently injure another. *Mader v. Mettenbrink* 118
7. The flood plane of a stream is the adjacent lands overflowed in times of high water from which floodwaters return to the channel of the stream at lower points. This plane is regarded as a part of

the channel. The water flowing within the flood channel is characterized as floodwater. *Mader v. Mettenbrink* 118

8. The flood channel must be considered as a part of the channel of the stream. Structures or other obstructions cannot be placed in its bed which will have a tendency to dam the water back upon the property of upper riparian or adjacent owners. *Mader v. Mettenbrink* 118

9. It is the duty of one who constructs an artificial drain with structures therein changing the natural flow of surface water to use reasonable care to maintain the same so that water will not be collected and thrown on another to his damage. *Gable v. Pathfinder Irr. Dist.* 778

10. Where damages are caused in part by an act of God and in part by negligence, the party guilty of negligence may be held only for that part which resulted from the negligence. *Gable v. Pathfinder Irr. Dist.* 778

Wills.

1. Where property is devised to the widow of testator for her life and at her death to his children, the children, during the life of the widow, cannot except to an allowance to the executor on behalf of, and affecting alone, the life interest. *Lund v. Rubeck* 335

2. Where during the existence of the widow's life interest property is held by a testamentary trustee under specified conditions, the remaindermen may not object to the trustee's report in the absence of a claimed breach of trust by the trustee affecting the beneficial interest of such remaindermen. *Lund v. Rubeck* 335

Witnesses.

1. In a criminal case, the credibility of witnesses and the weight of the evidence are for the jury to determine. The conclusion of the jury may not be disturbed by the Supreme Court unless it is clearly wrong. *Burnell v. State* 349

2. One who, by reason of insanity or imbecility, is unable to comprehend the obligation of an oath, or to understand and intelligently answer the questions put by the court upon a voir dire examination,

is incompetent to testify as a witness. *Garcia v. State* 571
3. The question of competency of a person to be a witness must be left to the sound legal discretion of the trial judge, leaving to the jury to determine the credit that ought to be given to the testimony. *Garcia v. State* 571
4. A hypothetical question is improper and should be excluded by the trial court which consists of a recitation of facts that do not furnish a basis for an expert opinion. *Thompson v. State* 685

Work and Labor.
1. The law implies a promise to pay the reasonable value of services rendered by one party and knowingly accepted by another. *Comstock v. Evans* 739
2. The opinion of a qualified witness as to the value of the services is admissible to prove such value when his testimony will aid the jury. This question is within the judicial discretion of the trial court to decide, and rulings thereon will not be reversed except in case of manifest error. *Comstock v. Evans* 739

Workmen's Compensation.
1. To warrant recovery under the workmen's compensation law, it must be proved that an accident occurred arising out of and in the course of employment producing injury that resulted in disability or death. *Cole v. Cushman Motor Works* 97
2. A compensation award cannot be based on possibilities or probabilities, but must be based on evidence that the claimant incurred a disability arising out of and in the course of his employment. *Cole v. Cushman Motor Works* 97
3. Upon a trial de novo in a workmen's compensation case, the Supreme Court will consider the fact that the trial court observed the demeanor of witnesses and gave credence to the testimony of some rather than to the contradictory testimony of others. *Cole v. Cushman Motor Works* 97
4. A compensable injury within the Workmen's Compensation Act is one caused by an accident arising out of and in the course of the employment. *Knudsen v. McNeely* 227
5. An accident within the Workmen's Compensation Act is an unexpected or unforeseen event happening

suddenly and violently and producing at the time objective symptoms of injury. *Knudsen v. McNeely* 227

6. In order to recover under the Workmen's Compensation Act, an employee must show by the greater weight of the evidence all the essential elements of an accident. *Knudsen v. McNeely* 227
7. An appeal to the Supreme Court in a workmen's compensation case is considered and determined de novo. *Knudsen v. McNeely* 227
8. Symptoms of pain and anguish, such as weakness or expressions of pain clearly involuntary or any other symptoms indicating a deleterious change in bodily condition, may constitute objective symptoms within the requirements of the Workmen's Compensation Act. *Knudsen v. McNeely* 227
9. An employee in a workmen's compensation action is entitled to recover an award if he establishes by the greater weight of the evidence that he sustained an injury resulting from an accident arising out of and in the course of his employment, notwithstanding a preexisting physical condition contributed to his disability. *Knudsen v. McNeely* 227